Installation and maintenance manual
Manuel d'installation et de maintenance

HRW
096 & 120

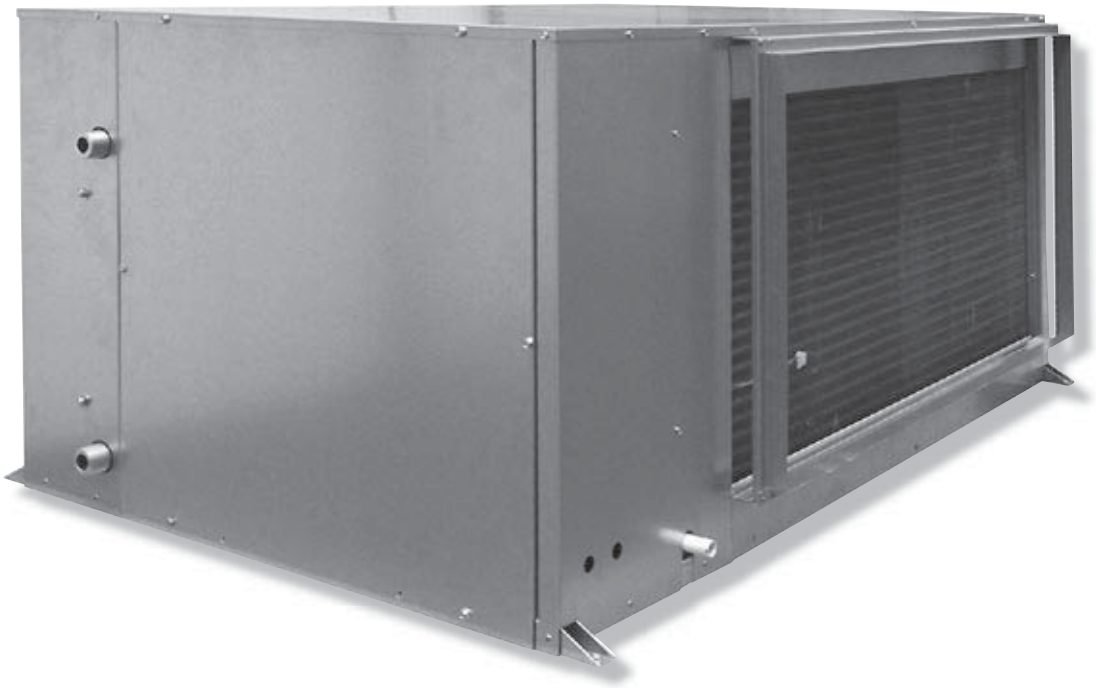

English **Français**

21.7 ↓ 30.0 kW

26.6 ↓ 38.1 kW

HFC 407C

Water source heat pumps
Pompes à chaleur sur boucle d'eau

IOM HRW3-N.4GBF
Date : **July / Juillet 2007**
Supersedes / Annule et remplace : **IOM HRW3-N.3GBF/05.07**

CE

INSTALLATION INSTRUCTION English

NOTICE D'INSTALLATION Français

INSTALLATIONSHANDBUCH Deutsch

ISTRUZIONI INSTALLAZIONE Italiano

INSTRUCCIONES DE INSTALACIÓN Español

English

CONTENTS

GENERAL RECOMMENDATIONS 3
SAFETY DIRECTIONS 3
WARNING 3
INSPECTION AND STORAGE 4
GENERALITIES 4
CONTENTS OF PARCEL 4
DIMENSIONS 5
HANDLING 5
NET WEIGHT 5
TECHNICAL SPECIFICATIONS 6
OPERATING LIMITS 6
ENVIRONMENT 6
AIR TEMPERATURE LIMITS 6
WATER TEMPERATURE LIMITS 6
ÉLECTRIC SPÉCIFICATIONS 6
ELECTRICAL POWER SUPPLY 6
INSTALLATION 7
UNIT LOCATION 7
DUCTING AND NOISE LEVEL REDUCTION 8
CONNECTION FRAME DIMENSIONS 9
AIR BLOWING FRAME 9
RETURN AIR INTAKE FRAME 9
MODIFYING THE AIR BLOWING DIRECTION 10
FILTER ACCESS 10
VENTILATION 10
EXTERNAL STATIC PRESSURE AVAILABLE 10
HYDRAULIC CONNECTIONS 11
RECOMMENDATIONS FOR HYDRAULIC CONNECTIONS 11
RECOMMENDATIONS FOR CLEANING AND FLUSHING OUT THE SYSTEM 13
PROTECTION AGAINST FREEZING 14
WIRING DIAGRAM AND LEGEND 15
WIRING DIAGRAM 15
LEGEND 15
POWER SUPPLY 15
DESCRIPTION OF WIRING DIAGRAM REFERENCES 15
PRESSOSTATS SETTINGS 16
COLOUR CODE 16
SETTING OF THERMAL PROTECTION AND FUSES 17
ELECTRICAL CONNECTIONS 17
GENERALITIES 17
RCL AND *µ*BMS CONTROL MODULES WIRING 18
RCL 18
*µ*BMS 20
*µ*BMS AND STORM 20
*µ*BMS, STORM AND MIU 20
APPLIANCE CONFIGURATION 21
CLIENT SETTINGS 21
FACTORY CONFIGURATION 21
PLUG IDENTIFICATION 21
RETURN AIR TEMPERATURE MEASUREMENT 22
POWER FAILURE 22
REMOTE ON/OFF MAKE/BREAK SWITCH 22
RCL ONLY 23
*µ*BMS SUPERVISION MODULE 23
ADDRESSING PROCEDURE 24
MOTORISED WATER VALVE 25
FINAL TASKS 25
STARTING - RECOMMENDATIONS - SETTINGS 26
COMMISSIONING 26
DEMAND FOR COOLING 26
DEMAND FOR HEATING 27
MAINTENANCE AND SERVICING 28
FAN DRIVE SYSTEM 28
FAULT FINDING 28
NEITHER THE FAN NOR THE COMPRESSOR OPERATE 28
VENTILATION (FAN) MODE OPERATES BUT THE COMPRESSOR DOES NOT OPERATE 29
INSUFFICIENT COOLING OR HEATING PRODUCTION 29
INSUFFICIENT WATER FLOW AT THE LEVEL OF THE PLATE EXCHANGER. 29
APPEARANCE OF WATER DROPLETS IN THE APPLIANCE 29
APPEARANCE OF ABNORMAL NOISES AND VIBRATIONS IN THE CASING 29
ALARM CODES 30
COOLING MODE 30
HEATING MODE 31
IN-WARRANTY RETURN MATERIAL PROCEDURE 32
SERVICE AND SPARE PARTS ORDER 32

IT IS MANDATYORY TO CUTOFF POWER SUPPLY BEFORE STARTING TO WORK IN THE ELECTRIC CASING BOXES

GENERAL RECOMMENDATIONS

Please read the following safety precautions very carefully before installing the unit.

SAFETY DIRECTIONS

Follow the safety rules in forces when you are working on your appliance.

The installation, commissioning and maintenance of these units should be performed by qualified personnel having a good knowledge of standards and local regulations, as well as experience of this type of equipment.

The unit should be handled using lifting and handling equipment appropriate to the unit's size and weight.

Any wiring produced on site must comply with the corresponding national electrical regulations.

Make sure that the power supply and its frequency are adapted to the required electric current of operation, taking into account specific conditions of the location and the current required for any other appliance connected with the same circuit.

The unit must be EARTHED to avoid any risks caused by insulation defects.

It is forbidden to start any work on the electrical components if water or high humidity is present on the installation site.

WARNING

Cutoff power supply before starting to work on the appliance.

When making the hydraulic connections, ensure that no impurities are introduced into the pipe work.

The manufacturer declines any responsibility and the warrantly becomes void if these instructions are not respected.

If you meet a problem, please call the Technical Department of your area.

If possible, assemble the mandatory or optional accessories before placing the appliance on its final location. (see instructions provided with each accessory).

In order to become fully familiar with the appliance, we suggest to read also our Technical Instructions.

The information contained in these Instructions are subject to modification without advance notice.

INSPECTION AND STORAGE

At the time of receiving the equipment carefully cross check all the elements against the shipping documents in order to ensure that all the crates and boxes have been received. Inspect all the units for any visible or hidden damage.

In the event of shipping damage, write precise details of the damage on the shipper's delivery note and send immediately a registered letter to the shipper within 48 hours, clearly stating the damage caused. Forward a copy of this letter to the manufacturer or their representative.

Never store or transport the unit upside down. It must be stored indoors, completely protected from rain, snow etc. The unit must not be damaged by changes in the weather (high and low temperatures). Excessively high temperatures (above 60 °C) can harm certain plastic materials and cause permanent damage. Moreover, the performance of certain electrical or electronic components can be impaired.

GENERALITIES

1 - To avoid any damage, this equipment must not be used to supply heating or cooling during building work.

2 - Check that the voltage, the number of phases and the capacity of the unit comply with the installation plans.

3 - Check the size of the unit in relation to the plans to ensure that the unit will be installed in the right location.

4 - After having removed the packing box, take out the suspension kit that is to be found inside the fan outlet frame.

5 - Before installing the unit, check its height in relation to the available free ceiling height.

6 - Take particular care over the location and routing of the water pipes and the condensate drainage pipe as well as the electrical wiring. The location and routing of these items must be clearly indicated on the plans.

7 - It is always advisable for the heat pump installer to consult with all the various entrepreneurs responsible for the pipe work, partitioning, ceiling and electrical installation on the site.

8 - If necessary, change the direction of the airflow outlet from the front to the side of the appliance, or vice versa, prior to installing the unit in the ceiling. Refer to the instructions detailed in the section « AIRFLOW OUTLET MODIFICATION».

9 - We advise the installer to cover the appliances with a plastic sheet to protect it during the final building work.

This is particularly important if work such as spraying the joists with fire retardant, sanding, spray painting and plastering has not been completed.

In the absence of a plastic sheet, the packing box can be modified to cover the machines during the building work.

CONTENTS OF PARCEL

Package contents:

1 appliance

1 RCL control module

1 installation manual

DIMENSIONS

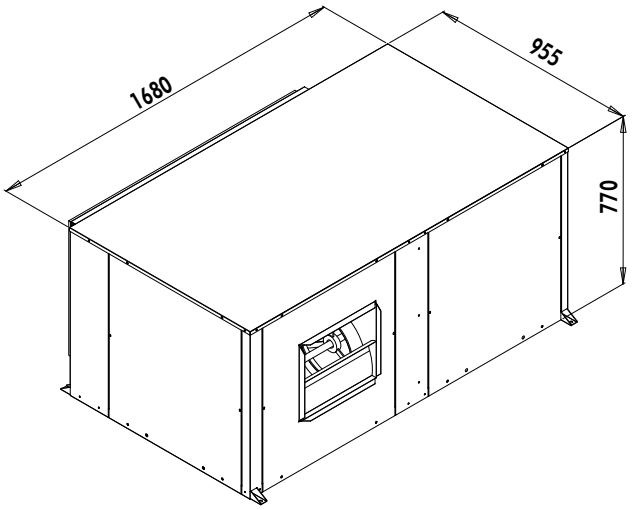

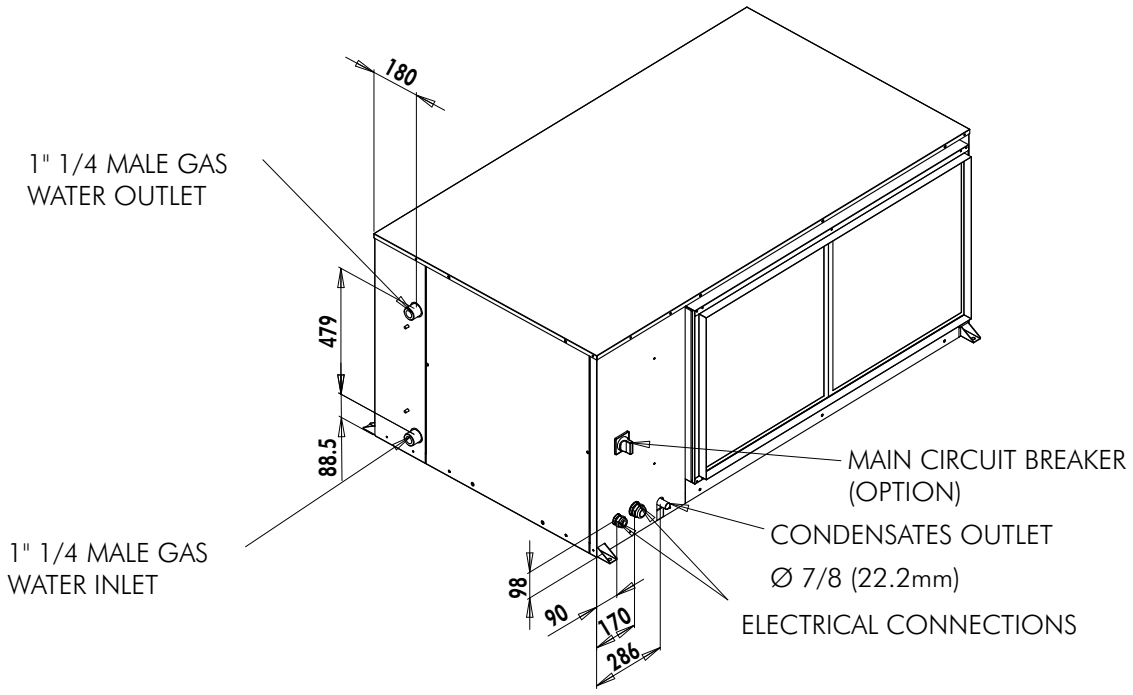

HANDLING

The appliance may be handled with a pallet truck or a forklift truck.

NET WEIGHT

	096	120
Weigth(Kg)	253	262

TECHNICAL SPECIFICATIONS

OPERATING LIMITS

ENVIRONMENT

This equipment is designed EXCLUSIVELY for INDOOR installation.

In general, sheltered locations such as garages, roof space, etc, do not provide sufficient protection against extreme temperatures and/or humidity and may be harmful to the unit's performance, reliability and service life.

AIR TEMPERATURE LIMITS

	Standard unit	
	Cooling	**Heating**
Minimum ambient temperature	10 °C	10 °C
Normal ambient temperature	27 °C	20 °C
Maximum ambient temperature	38 °C	30 °C
Minimum air intake temperature (1) (2)	10 °C	10 °C
Normal air intake temperature db/wb	27/19 °C	20 °C
Maximum air intake temperature bs/bh (1) (2)	38/28 °C	27 °C

db: dry bulb wb: wet bulb

WATER TEMPERATURE LIMITS

	Standard unit	
	Cooling	**Heating**
Minimum water inlet temperature (1)(2)	15 °C *	13 °C
Normal water inlet temperature	30 °C	20 °C
Maximum water inlet temperature (1)(2)	50 °C *	32 °C

(1) At nominal air and water flow conditions in accordance with the standard: EN 14511-2

(2) The minimum and maximum values cannot be added together. If one of the values is at its maximum or minimum level, the other two values must not exceed the normal operating conditions specified for a standard unit.

*Please consult us for operating conditions exceeding these temperatures.

Initial start-up and winter operation of the units are guaranteed down to an ambient temperature of 5 °C, with the return air intake temperature at 5 °C and the water inlet temperature at 13 °C, with the nominal air and water flows used for the performance test in accordance with the standard: EN 14511-2.

Note: These operating operation are neither normal nor intended for continuous operation. It is understood that the unit is only subjected such conditions at start-up for bringing the temperature of the air-conditioned area to the right temperature.

ÉLECTRIC SPÉCIFICATIONS

ELECTRICAL POWER SUPPLY

A variance of ±10% is acceptable in relation to the operating voltage marked on the appliance's Maker's Plate. Phase imbalance on three phase units must not exceed 2%.

Operating voltages:

➢ 400V / 3 ph / 50 Hz + N (360 Volts minimum; 440 Volts maximum.)

Comments: the stated voltages represent the accepted range. However, certain components may be subject to premature wear on appliances operating continuously, for extensive periods, on abnormally low or high voltages.

INSTALLATION

UNIT LOCATION

1 - Install the unit in a location allowing easy removal of the filter and the access panels to the electrical box/compressor and fan by leaving sufficient free space for servicing personnel to perform maintenance and repairs. Leave sufficient space for the water, electricity and duct connections.

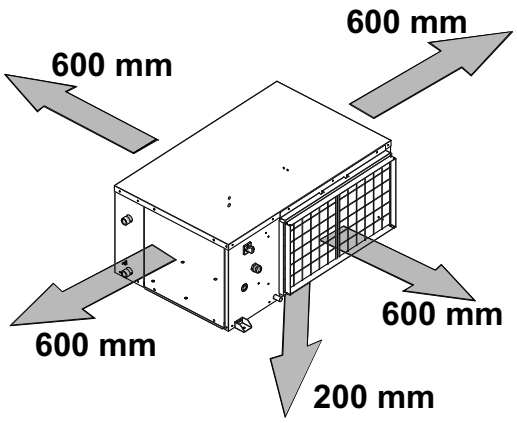

2 - The installer must ensure that access under the suspended ceiling is provided, and that sufficient space is provided for the suspension angle brackets, the duct attachment collars and the water and electrical connections.

3 - Provide space under the unit for a siphon on the condensates drainage pipe. Do not install the unit on top of pipe work.

4 - Each unit is suspended from the ceiling on four threaded rods.

Warning! Do not use rods of a diameter smaller than M10. The rods must be solidly anchored to the ceiling and to the ceiling joists.

5 - Arrange the threaded rods in accordance with the dimensions stated below. The use of nuts and locknuts is recommended for attaching the suspension rods to the unit as the unit's vibrations may loosen a single nut. The installer is liable for any damage in the event of this recommendation not being followed.

6 - To facilitate drainage, the unit must be angled in both planes towards the condensates drainage pipe.

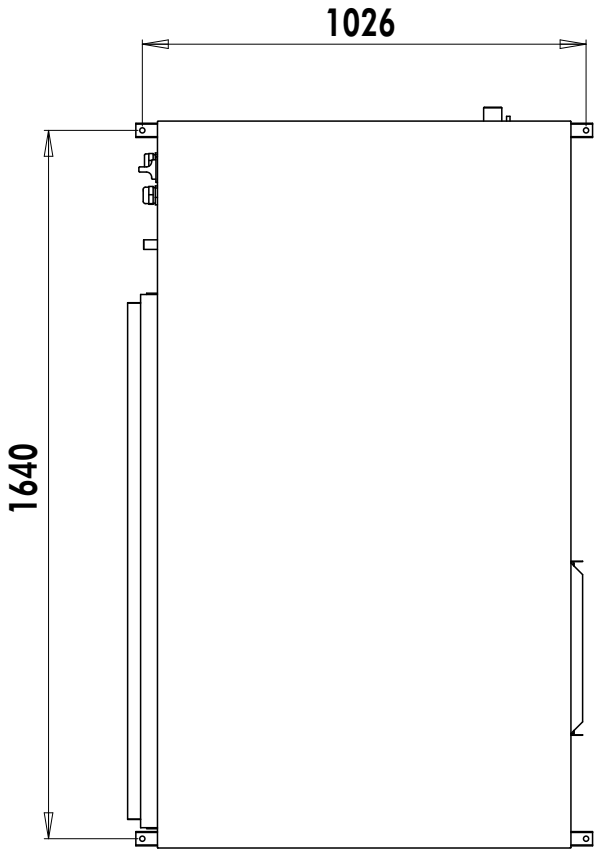

DUCTING AND NOISE LEVEL REDUCTION

Water circuit heat pumps are usually installed in conjunction with an air blowing duct. A return air duct may also be required. All ductwork shall be compliant with best air conditioning engineering practices.

The air blowing duct system normally consists of a flexible connector mounted on the unit, a bridging section to link to the size of the main duct, a short section of straight duct, an elbow without a damper and a main duct with spurs equipped with distribution grilles as illustrated in the drawing below. The sum total of the bridging section angles must not be higher than 30°, otherwise there will be significant performance losses.

Do not connect the main duct directly to the unit without a bridging section to reduce the duct size to that of the unit's connection collar. In the event of using metal ducts, only the sides of the elbow section and all the spur duct sections should be covered with fibreglass sound insulation for reducing the noise level. Fibreglass duct panels are more sound absorbent and may enable the flexible canvas connection to be eliminated.

The duct network must be laid out to avoid any rectilinear runs betweens the heat pump outlet and the air distribution outlets.

The return air intake ducts can be connected to a grille/filter located at the base of a wall, then directed via hollow partitions towards a ceiling mounted plenum or via ceiling mounted grilles. The ceiling grilles must not be located directly below the air conditioning unit.

The return air intake duct can be connected directly to the standard filter bracket. (Lateral filter removal advisable).

Do not drill panel screws directly into the unit's casing for connecting the blowing and return air intake ducts, especially on the air return side, as there is a risk of damaging the condensate recovery tray and the battery.

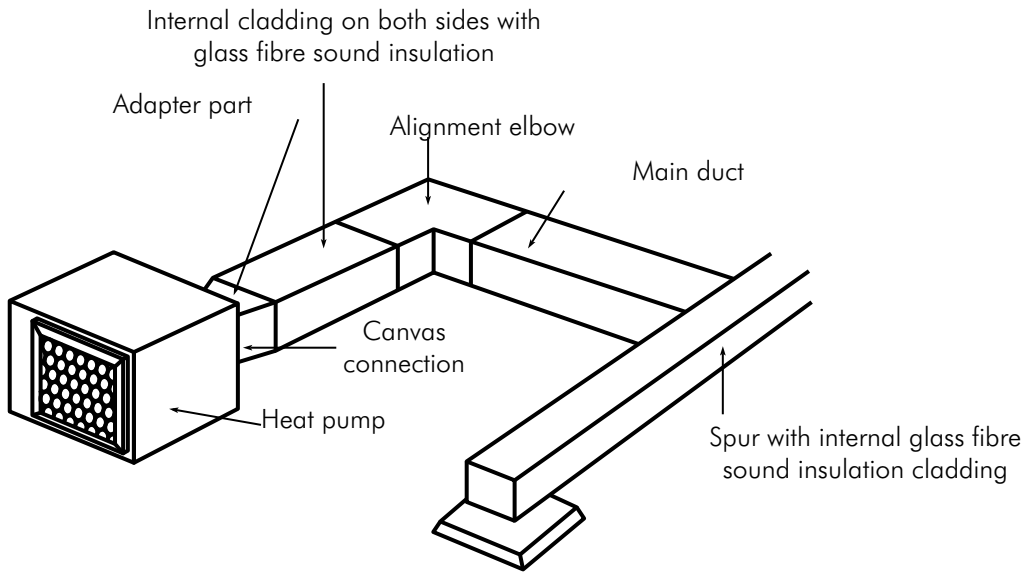

Recommended layout diagram for installation with several air distribution outlets

CONNECTION FRAME DIMENSIONS

AIR BLOWING FRAME

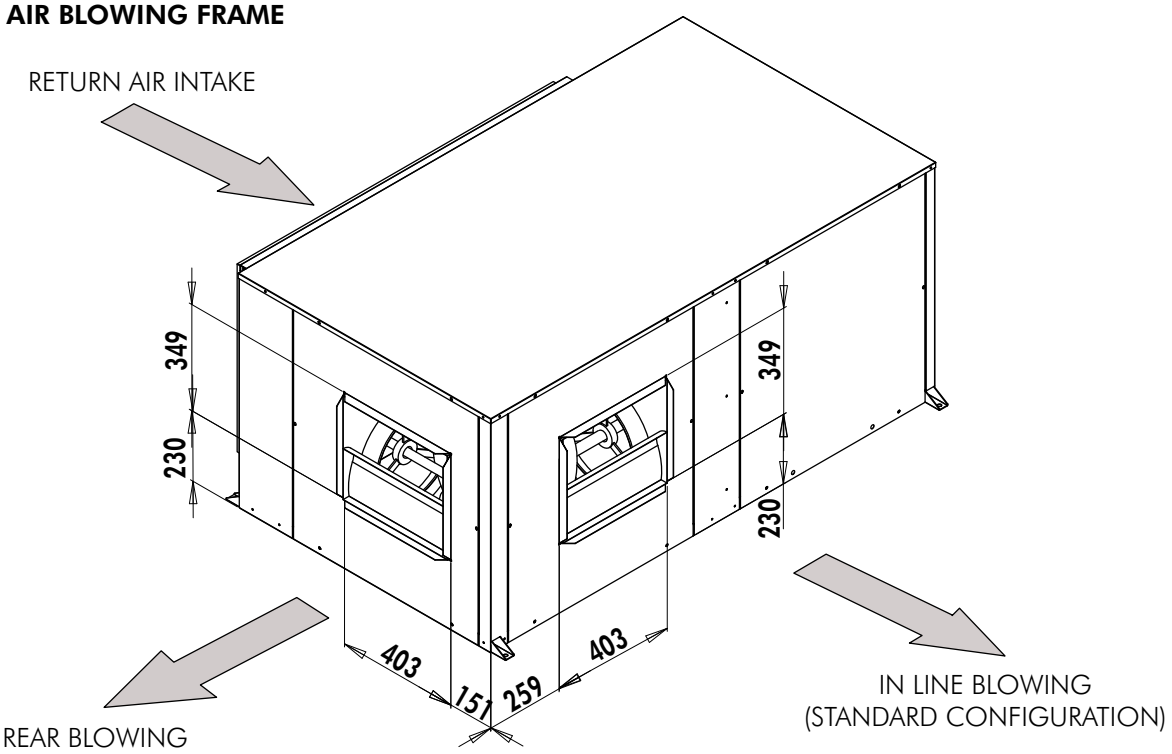

RETURN AIR INTAKE FRAME

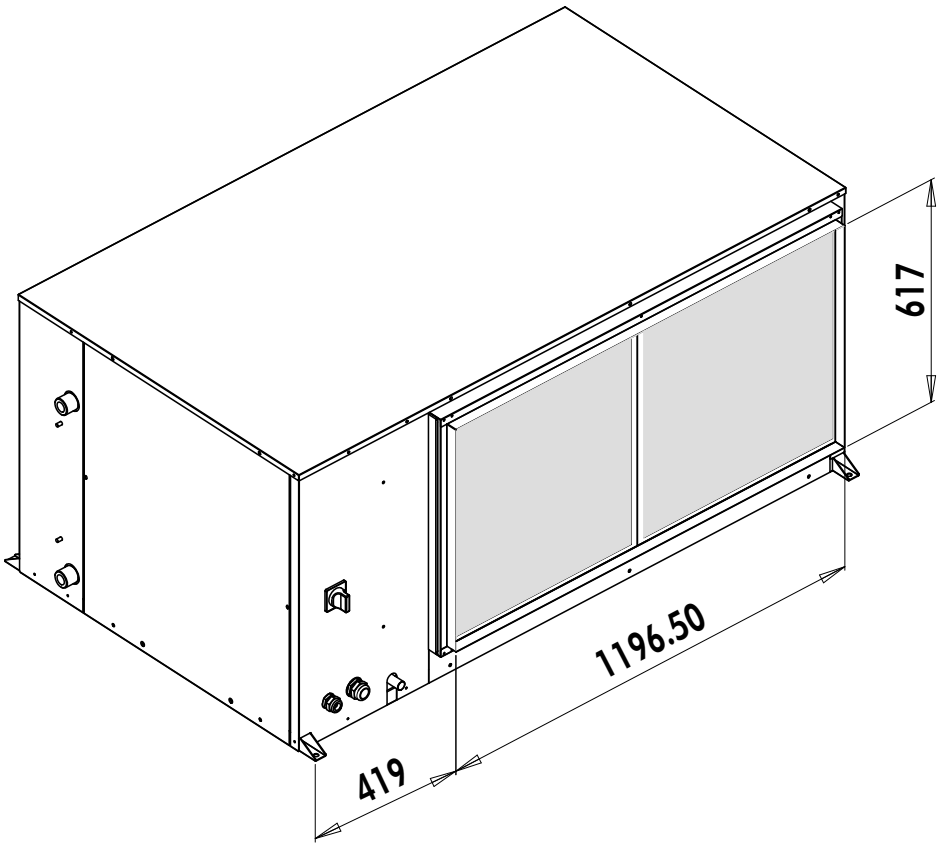

MODIFYING THE AIR BLOWING DIRECTION

The unit sizes 096 to 120 can be supplied configured for either frontal air blowing, known as "IN LINE", or for side air blowing, known as "REAR". It is also possible to modify the air-blowing configuration on site. To achieve this:

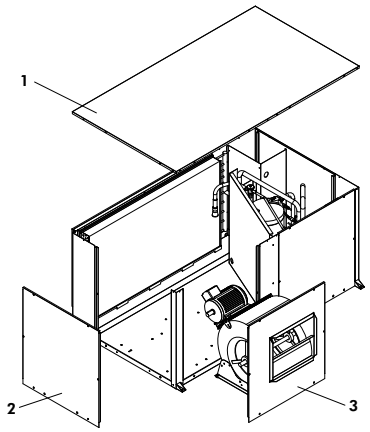

1 - Remove the top panel **1**.

2 - Remove the fan motor access panel **2** and release a small length of motor cable.

3 - Remove the fan blower panel **3**.

4- Fit the fan blower panel **3** in the same location as the access panel **2**.

4 - Refit the fan access panel **2**.

5 - Refit the top panel **1**.

FILTER ACCESS

Each unit is supplied with a connection frame also serving as the filter support. This enables to filter to be removed from the side without having to dismantle the duct or the connection frame.

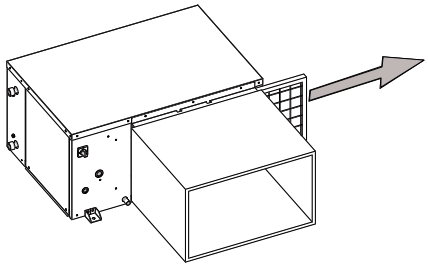

VENTILATION

An outdoor air intake (new air) may be required for ventilation. The blown air temperature must be controlled in order to avoid the temperature of the mixture of outdoor air and return air at the heat pump inlet exceeding the appliance's operating limits. It is also common practice to shut down ventilation during periods of inoccupation (night time setting of the set temperature).

Each appliance's ventilation system is generally a sub-system within the building, with its own distribution duct network. The simple introduction of outdoor air into each return air plenum, quite close to the unit's return air intake is sufficient and recommended. New air should not be introduced directly into the appliance. Provide for a sufficient distance to ensure effective mixing of the outdoor air with the return air. (Refer to "Operating limits").

The flow / static pressure adjustment is made with the aid of a variable pulley. When adjusting this pulley, it is important to ensure that the belt is positioned properly. The pulleys / belt assembly must be aligned perfectly and the belt tensioned in accordance with best practices.

EXTERNAL STATIC PRESSURE AVAILABLE

MODELS	Speed	External Static Pressure (Pa)												
		0	25	50	75	100	125	150	175	200	225	250	275	300
96	0 turn	6000	5778	5544	5300	5010	4678	4250	3578					
	1 turn	5645	5428	5178	4910	4578	4156	3400						
	2 turn	5360	5122	4850	4533	4144	3555							
	3 turn	5025	4778	4483	4133	3639								
120	0 turn	8700	8440	8120	7800	7480	7150	6800	6410	6000	5600	5100	4580	4000
	1 turn	8400	8085	7740	7400	7020	6640	6230	5800	5340	4840	4310	3680	2950
	2 turn	7960	7650	7310	6960	6580	6160	5730	5240	4670	4010	3120		
	31/2 turn	7420	7070	6700	6300	5870	5410	4910	4340	3650	2800			

HYDRAULIC CONNECTIONS

RECOMMENDATIONS FOR HYDRAULIC CONNECTIONS

1. It is recommended that all units are connected to a water supply and return pipe system of the Tickelman Loop type. The Tickelman Loop system is self-balancing and thus only requires manual balancing if a large number of units with different flow and pressure loss characteristics are connected to a single hydraulic loop. A very simple way of checking the hydraulic balance is to measure the temperature difference between the water connections. To ensure a correct water flow, the difference must be in the region of 3 to 7 °C in Cooling mode and 2 to 5°C in Heating mode.

   A system with two parallel pipes can also operate in a perfectly adequate manner, but it is more difficult to achieve, and to maintain, balance.

2. Steel, copper or P.V.C. pressure pipes may be used.

3. It is advisable to make the unit's water supply and return conveyance lines with short lengths of high-pressure hose, as they form excellent shock absorbers for unit operating noise and hydraulic pressure surges.

   One of the hose ends must be fitted with a rotating connector to facilitate removal for maintenance. Rigid pipes can be connected directly to the unit, but this is not recommended due to their inability to absorb vibrations and noise.

   Rigid pipes must be equipped with removable connectors to facilitate future removal of the unit from its location.

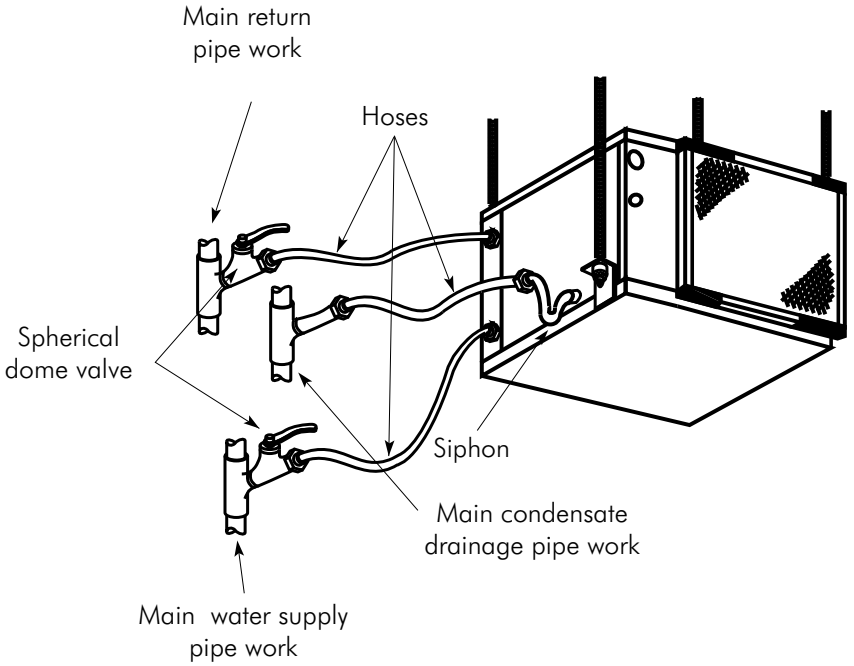

4. Certain flexible hose threaded connectors are supplied with sealing paste. If this is not the case, use Teflon tape to create a tight seal.

5. Each unit must be equipped with isolation valves on the water inlet and outlet pipes. The return isolation valve is used for both cutting off the water supply and balancing the installation's water flow. As it is used to establish the balance of the flows, **it must be equipped with a lockable position end stop**. This end stop ensures that, after the valve is closed, it can only be re-opened as far as the position required to maintain a balanced water flow.

6. **Never connect a unit to the water supply and return lines without completely cleaning and flushing out the hydraulic loop beforehand.** After performing these operations, the units must be connected, with all valves completely open, ready for the system to be filled with water.

COMMENT: In order to limit clogging the plate heat exchanger and to optimise unit operation, it is advisable to equip the system with a **sieve filter** (Ø 0.8 mm) on the unit water inlet pipe work. This filter should be installed between two isolation valves and should remain accessible to the user for periodic checks.

7. Use steel, copper or P.V.C. pipes for the condensates drainage pipe. Each unit is supplied with a connector for condensates drainage.
8. The condensates drainage line must comprise a siphon and run from the unit on a downward slope of at least 2%. Generally, the siphon is connected directly to the unit's condensates drainage outlet. A length of plastic pipe can be used between the siphon and the condensates drainage line.

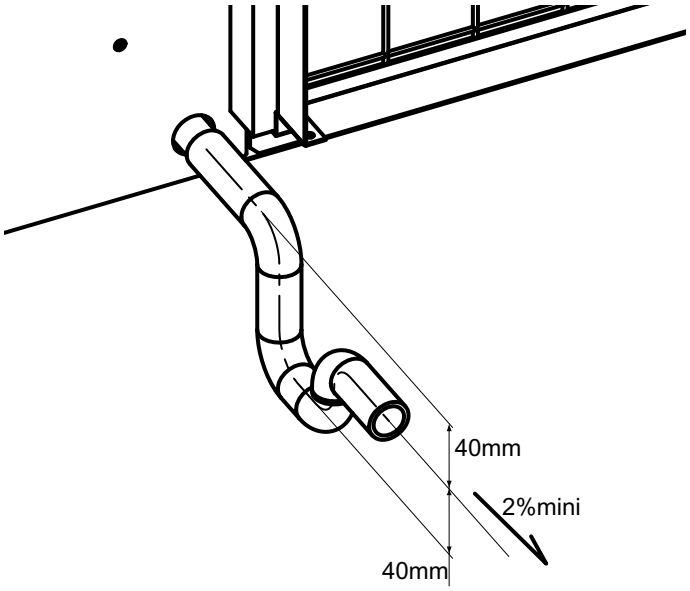

A complete condensates drainage system with copper or P.V.C. pipe can also be used.

Screw-on connectors shall be fitted to facilitate drainage pipe removal if copper pipe is used for the drainage pipe work.

9. No point of the condensates drainage pipe work should be located above the level of one of the units' condensate drainage outlet connection.
10. The circuits' high points must be bled of air.
11. Comply with current regulations in terms of dielectric isolation of the connectors and the pipe work.

RECOMMENDATIONS FOR CLEANING AND FLUSHING OUT THE SYSTEM

1. Before commissioning an appliance for the first time, the water loop must be cleaned and rinsed out to remove any dirt and manufacturing debris.

   If the appliances are equipped with isolation valves (either electric or pressostatic), the water supply and return conveyance circuits to and from each machine must be connected to each other. This will avoid any dirt being introduced into the units.

   Flushing water through the units is acceptable if they are not equipped with water flow control devices.

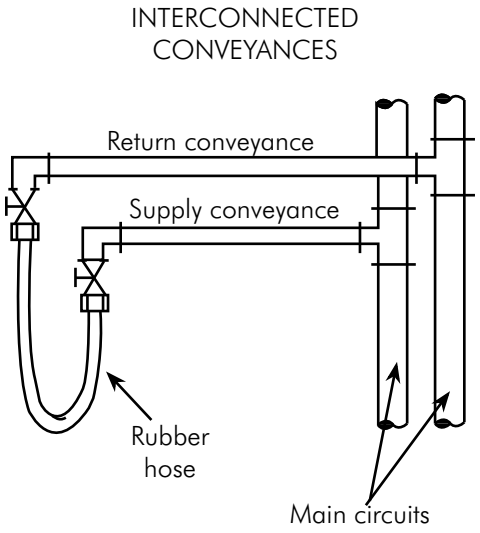

2. The system must be filled from the mains water supply. All air bleeds must be open during filling. Close the air bleeds once the system is filled.

   The installer must start the main circulation pump with the water top-up tap on the pressure reduction valve in the open position. Check the air bleeds by increasing order of height to ensure water flows freely throughout the entire system.

   Power supply to the cooling tower must be shut down, and the water loop temperature regulation thermostat must be set at 27 °C.

   As the water circulates through the system, the installer must seek out and repair any possible pipe work leaks. The drain cocks, on the lowest points on the circuit, must be open for flushing out and chasing out any impurities. Ensure that the mains water valves are adjusted to allow water to enter at the same speed as it exits. Check the pump inlet pressure gauge and manually adjust the compensating valve to maintain the same pressure before and after the opening of the drain taps. Flushing must be performed for at least two hours, or longer if necessary, until clear and clean water is obtained at the drain taps.

3. Stop the additional heating and the water circulation pump. Open all the bleed points and the drain taps to empty the system completely. The short-circuited water supplies and returns must now be connected to the units' inlet and outlet connections. It is recommended to use Teflon tape on the pipe connector threads. Do not use sealing paste on the hoses' rotating connecters.

4. **Formerly, sodium tri-phosphate used to be recommended as a cleaning agent for flushing.** However, nowadays numerous countries forbid the introduction of phosphates into their wastewater networks. **Therefore, it is now recommended that the system is flushed out with hot water (30 °C).**

5. Fill the system again with clean water. Test the water acidity level (litmus paper), and treat as required to obtain a slightly alkaline water quality (pH 7.5 to 8.5).

   At this stage, the recommended percentage of anti-freeze can be added. Use commercial quality anti-freeze specifically intended for air conditioning systems. Do not use automobile radiator anti-freeze.

6. On the main electrical cabinet, adjust the heater set temperature point at 20 °C and the cooling tower set temperature at 30 °C. Connect the power supply to all motors and start the circulation pumps.

   When the normal flow level has been reached through all components, including the cooler (irrespective of the season) and when the air is bled form the system and the loop temperature has stabilised, each appliance is ready to be checked, tested and started for balancing the air and water flows.

PROTECTION AGAINST FREEZING

On all appliances, anti-freezing protection is provided by a temperature probe connected to the regulator. This shuts down the PAC if the water outlet temperature is below 8°C for 5 seconds.

A fault code 111110000 (5 flashes) is then generated.

If the temperature rises to above 15°C for 1 minute, the fault is automatically cancelled and the PAC is authorised to restart.

Note:

If 3 default codes 111110000 (5 flashes) are generated in less than one hour, then the regulator switches the PAC to total safety shutdown mode.

Am additional protection is assured by a differential pressostat. This safety device is fitted on the plate exchanger water side in order to guarantee that water circulates in the installation on one hand, and that there is an adequate minimum water flow on the other hand.

Note:

The "differential pressostat" provides "total safety shutdown" the first time it is activated.

It can be reset manually by switching off the mains supply to the appliance.

The alarm fault code generated is code 100000000 (1 flash).

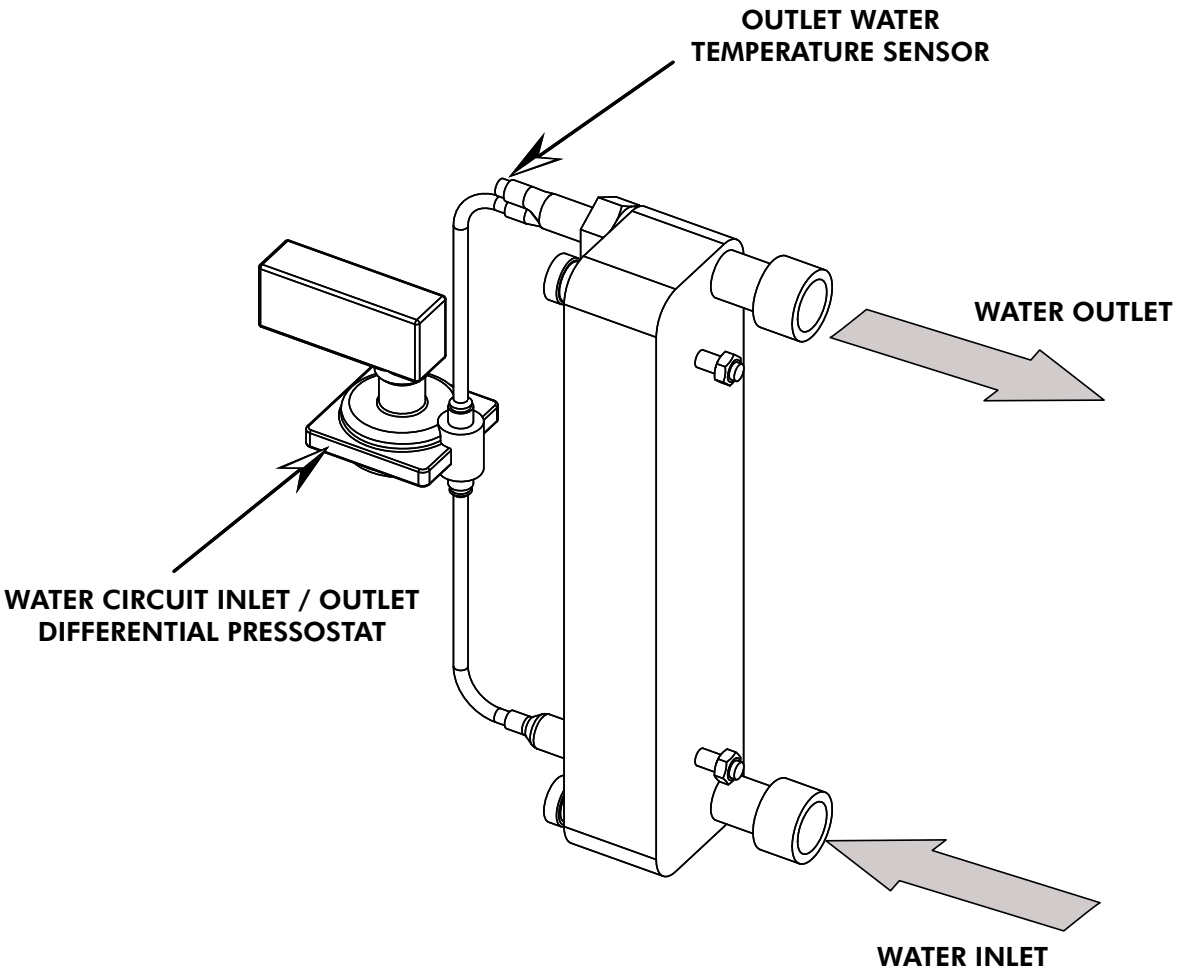

WIRING DIAGRAM AND LEGEND

WIRING DIAGRAM

SEE APPENDIX

LEGEND

N 764

SE 3511 models 096/120 cooling only or heatpump 3N 400V +/-10% 50Hz

POWER SUPPLY

The power supply must be protected by an FFG mains circuit breaker or fuses supplied by the installer.

A switch, in compliance with the characteristics detailed in Chart 1, can be supplied as an option. (It must be fitted near the unit if supplied by the installer).

All the electrical installations and wiring associated with this equipment must comply with local installations regulations.

CHART 1:

MODELS		CHARACTERISTIC OF SWITCH Q1 (gauges minimum for switch)		FFG Fuse aM (without heating)	Full load current (max) (without heating)	FFG Fuse aM (with heating)	Full load current (max) (with heating)	Starting amperage
400V	**096**	Ith = 40 A	Pdc = 200 A	25 A aM	20.4 A	32 A aM	27 A	114.6 A
	120	Ith = 40 A	Pdc = 200 A	25 A aM	24 A	32 A aM	32 A	122.4 A

400 V three phase models:

Connection to the terminals N; L1; L2; L3 and PE of the general terminal block X or the Q1 switch supplied as an option.

DESCRIPTION OF WIRING DIAGRAM REFERENCES

FFG : Fuses according to chart 1 (not supplied)

Q1 : Main switch (supplied as an option)

FF7 : Magneto-thermal trip switch

KA1 : Phase cut-out and sequence control module

X1 : Connection terminal block

X2 : Connectionr block for wire heating

COOLING

M1 : Refrigeration compressor.

K1 : M1 compressor power contactor.

LP : Automatic reset Low Pressure pressostat.

HP : Automatic reset High Pressure pressostat.

RV1 : 4 way valve for cycle inversion.

SW : Condensed water level detector

VENTILATION

MV : Treated air fan motor.

K3 : MV contactor.

FT3 : MV thermal relay.

WATER CIRCUIT

Y1 : Water circuit valve (not supplied-available in option).

FDP : Water circuit inlet / outlet differential pressostat

CONTROL AND REGULATION

RCL : Local control module.

ICT : Anti-freezing protection sensors.

RT : Air temperature sensor.

LWT : Outlet water temperature sensor.

SM : Remote ON/OFF switch, 100 m maximum (Not supplied -Please consult us for longer distances).

CLK : CLOCK input remote ON/OFF

REMOTE MANAGEMENT AND PROGRAMMING MODULE KIT (<100M)

μBMS : Supervision module

FAULT REPORTING OPTION

KA2 : Remote fault reporting relay (8 A max / 230 V)

ELECTRIC HEATING BATTERY OPTION

FF2 : Fuse carrier for heating

EC : Heating elements

K2 : Power contactor for heating elements

FA : Automatic reset safety thermostats.

FM : Manual reset safety thermostats.

PRESSOSTATS SETTINGS

LP : Low Pressure fixed setting: 1.5 bar (20 PSI) reset at 35 PSI

HP : High Pressure fixed setting: 29 bar (420 PSI) reset at 305 PSI

COLOUR CODE

BK	: Black	OG	: Orange	GNYE	: Green/Yellow
BN	: Brown	WH	: White	RD	: Red
BU	: Blue	GY	: Grey	VT	: Violet
YE	: Yellow				

SETTING OF THERMAL PROTECTION AND FUSES

MODELS		thermal relay FT3	Magneto-thermal trip switch FF7	FF2 Fuse /gG type
400V	**096**	2.6 A	2 A	25 A gG
	120	3.4 A	2 A	32 A gG

ELECTRICAL CONNECTIONS

GENERALITIES

Ensure that the available electrical power supply and the network frequency are matched to the required operating current, taking account of the appliance's specific location and the current required to supply any other appliances connected to the same circuit.

1. Ensure that the unit is supplied with the specified voltage. Two stuffing boxes and one grommet hole are provided on the side of the appliance. They are used respectively for the power and the control wiring. The power supply line must be properly dimensioned with a motor supply type fuse or a mains circuit breaker to protect the circuit against voltage surges. (Refer to the Maker's Plate for the voltages to be taken into consideration).
2. The electrical power supply three-phase 380V/3ph/50Hz must comprise a neutral to feed the control circuit.
3. Always shut down the power supply to the unit before connecting the thermostat wiring.

VERY IMPORTANT:

3N~400V-50HZ

The outdoor unit is equipped as standard with a phase sequence and cut-out controller located in the electrical box.

THIS PRODUCT IS EQUIPPED WITH A PHASE SEQUENCE CONTROLLER. THE LED's INDICATE THE FOLLOWING CONDITIONS:

Green LED = 1

Yellow LED =1

Low voltage supply

The compressor rotation direction is correct

Green LED = 1

Yellow LED =0

Phase inversion or phase absent (L1)

The compressor and the fans do not start.

Green LED = 0

Yellow LED =0

Phase absent (L2 or L3)

the compressor and the fans do not start.

RCL AND *µ*BMS CONTROL MODULES WIRING

RCL

Unscrew the lower screw on the RCL control.

Separate the RCL control from its support bracket with the help of a flat bladed screwdriver

Checking the support bracket :

Ensure that the wall surface is completely flat at the point where you wish to install the RCL control, as it is important that the support bracket is not twisted on installation, because any bending could lead to the control not clipping together properly and result in operating difficulties.

Fitting the support bracket :

- ➢ Present the support bracket to the desired location and align it with a spirit level.
- ➢ Mark the screw locations.
- ➢ Make a hole or install appropriate plugs according to the material (wood, concrete, plasterboard etc.).
- ➢ Screw the support bracket to the wall, preferably with round head screws matching the following characteristics :
  - Minimum length : 15 mm,
  - Maximum head diameter : 7 mm,
  - Maximum thread diameter : 3.5 mm,
  - Head protrusion : 3.5 mm.

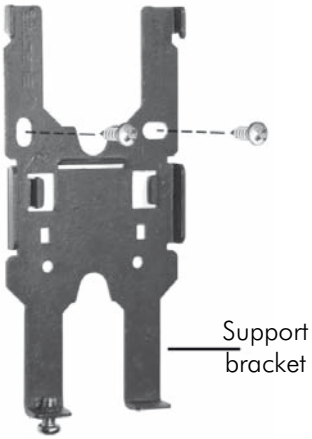

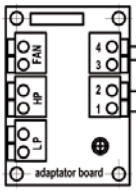

ADAPTER BOARD

Irrespective of the appliance being equipped with an MIU board, the RCL control module must be connected in accordance with the diagram below.

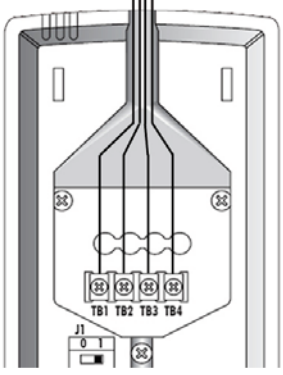

Use twisted pair telephone wire with a section of between 0.4 and 0.65 mm^2 for wiring the control modules.

Take care to comply with the terminal connection reference numbers.

Set the DIP switches marked J1 and J2 in accordance with your configuration nd the modes that are accessible.

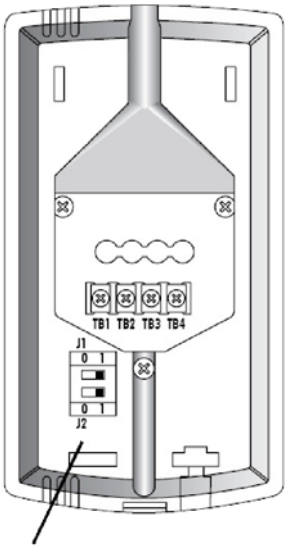

Dips switches J1 and J2 for parameterisation

RCL control recommended setting				Accessible modes					PLUG
Dip J1		Dip J2							
0	1	0	1	Off	Cool	Heat	Auto	Fan	
	X	**X**		**X**	**X**			**X**	ST
	X		**X**	**X**			**X**	**X**	RC - RH - SH
X		**X**		**X**	**X**	**X**	**X**	**X**	RC - RH - SH

Clip the RCL control onto the support bracket.

Replace the lower screw in such a way that the RCL control is held firmly in place on the support bracket

Lower screw

µBMS

µBMS AND STORM

If the appliance is not equipped with an MIU board, the µBMS control module must be connected in accordance with the diagram below.

Use screened twisted pair telephone wire with a section of between 0.4 and 0.65 mm² for wiring the control modules.

Refer to the following chapter for detail of the appliances' addressing

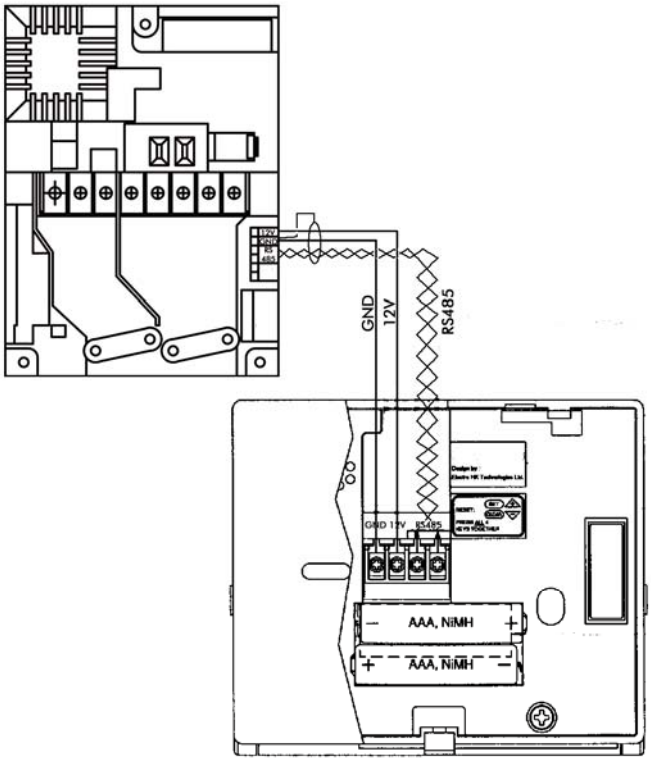

µBMS, STORM AND MIU

If the appliance is equipped with an MIU board, the µBMS control module must be connected in accordance with the diagram below.

Use screened twisted pair telephone wire with a section of between 0.4 and 0.65 mm² for wiring the control modules.

Refer to the following chapter for detail of the appliances' addressing

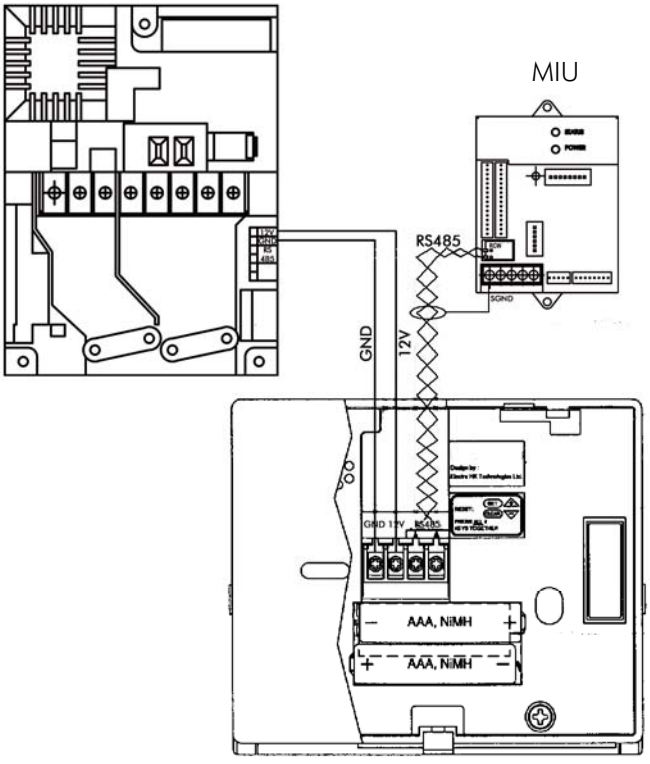

APPLIANCE CONFIGURATION

CLIENT SETTINGS

Jumper	Configuration	FACTORY setting
J5	Closed = ambient temperature is measured at the RCL.	Closed
	Open = ambient temperature is measured with the Return sensor (RT) located on the appliance.	
J8	Closed = the fan is controlled via the compressor and the ICT sensor in Heating mode.	Closed
	Open = the fan operates continuously in Heating mode, except in OFF mode.	
J3	Closed = ON / OFF with restarting via the RCL possible	Closed
	Open = Remote ON/OFF closed = mode Off	

FACTORY CONFIGURATION

Type	J2	J6	Description	Name	Colour
RC	0	0	Cooling and thermodynamic Heating	PAC-RC	Black
SH	0	1	Thermodynamic Cooling + thermodynamic Heating or electric heating depending on appliance return	PAC-SH	White
ST	1	0	Cooling only	PAC-ST	Red
RH	1	1	Cool + heat by electric heat	PAC-RH	Blue

PLUG IDENTIFICATION

PLUG MODEL HRW-RC

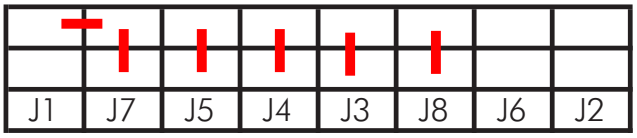

PLUG MODEL HRW-SH

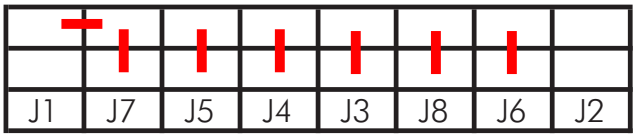

PLUG MODEL HRW-ST

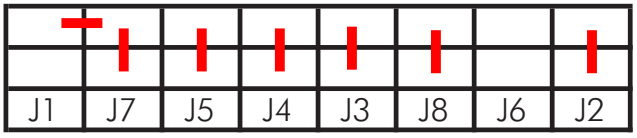

PLUG MODEL HRW-RH

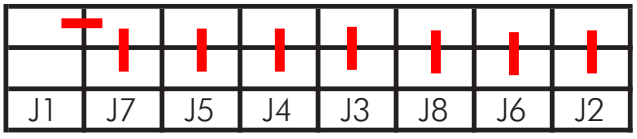

RETURN AIR TEMPERATURE MEASUREMENT

As the default factory setting, the jumpers are configured so that return air temperature measurement is performed via a sensor located on the RCL control module.

If the RCL control module is not sited in the air-conditioned premises or is sited at a distance for various reasons, we recommend the use of the Return sensor (RT) located on the appliance itself. To activate the Return sensor (RT) located on the appliance, you just have to cut off the jumper J5 located on the configuration Plug (Refer to previous paragraph).

If the appliance is installed with an air intake duct and the fan is OFF when there is no demand for Heating (Jumper J8 Closed) (Refer to previous paragraph), we do NOT recommend the use of the return air sensor (RT) located on the appliance. It is preferable to install an RCL control module or an ambient sensor box, available as options from our sales department.

POWER FAILURE

In the event of mains power supply being cut, and after power has been restored, the appliance will restart in the same mode and with the same settings as before the power cut.

During a power cut, the RCL control module display will be maintained for a maximum period of 10 minutes.

If the power cut lasts longer than 10 minutes, the RCL control module values will be lost, but the appliance will restart with the same operating parameters as before the power cut. After a power cut lasting more than 10 minutes, and after restarting, the RCL values will be false.

To minimise disruptions caused by power cuts the μBMS supervision module is equipped with rechargeable batteries offering 24 hours autonomy. After 24 hours, the time and date will need to be reprogrammed. However, the ON/OFF programmes and the various zone parameters will remain stored in its memory.

The battery recharging cycle lasts longer than 24 hours. If another power cut occurs whilst the batteries are not 100% charged, the 24 hours autonomy cannot be guaranteed.

Theoretically, there is no need to replace the batteries. However, if they are to be replaced, we recommend using the same type of batteries as those originally fitted. The old batteries should be disposed of in a recyclable container intended for this purpose.

REMOTE ON/OFF MAKE/BREAK SWITCH

An make/break switch can be connected to the CLOCK input on the STORM PCB for Remote control of the ON/OFF modes.

J3 Closed = ON / OFF with restarting via the RCL possible (CLOSED factory setting)

Open = Remote ON /OFF closed = OFF Mode

Operating principle dependent on J3 statuses and CLOCK input

J3=>open

If CLOCK = Closed, then OFF Mode and no command possible via the RCL. In this event, CLOCK input has priority.

If CLOCK = Open, then ON Mode.

Switching CLOCK input from the Closed position to the Open position results in ON Mode, irrespective of the Mode prior to switching.

J3=>Closed

This configuration provides the same level of priority between the CLOCK input and the RCL:

If CLOCK = Closed => then ON Mode

If CLOCK = Open => then OFF Mode

Switching CLOCK input from the Open position to the Closed position results in ON Mode, irrespective of the Mode prior to switching.

General remarks:

A separate make/break switch must be used for each machine.

We recommend the use of wire with a maximum section of 1 mm^2.

RCL ONLY

10 appliances can be connected to a single RCL remote control module.

The maximum distance between the RCL and the first unit is 30 metres.

The maximum distance between the RCL and the furthest unit is 100 metres.

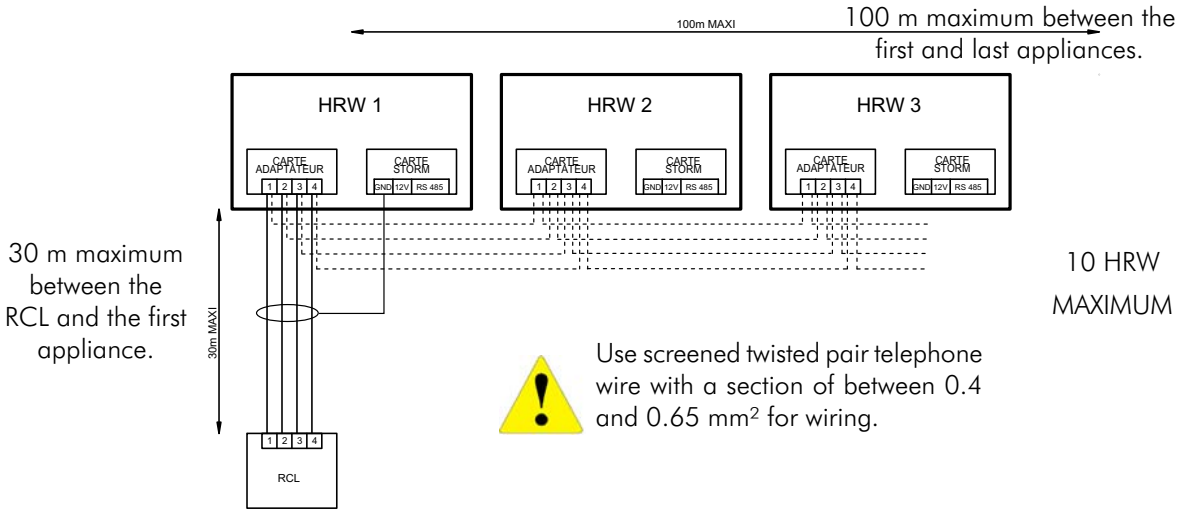

*µ*BMS SUPERVISION MODULE

The *µ*BMS supervision module / micro supervisor can be connected to a maximum of 32 appliances and enables independent control of up to 15 independent zones. Each zone has its own ON/OFF programming as well as customised set temperature settings.

The programming (ON/OFF, set temperature, Mode, etc.) of the zone 0, enables the *µ*BMS supervision module to send the command to all the units at the same time.

- The maximum distance between the RCL and the first unit is 30 metres.
- The maximum distance between the RCL and the furthest unit is 100 metres.
- The maximum distance between the *µ*BMS supervision module and the first unit is 30 metres.
- The maximum distance maximum between the *µ*BMS supervision module and the furthest unit is 1,000 metres.

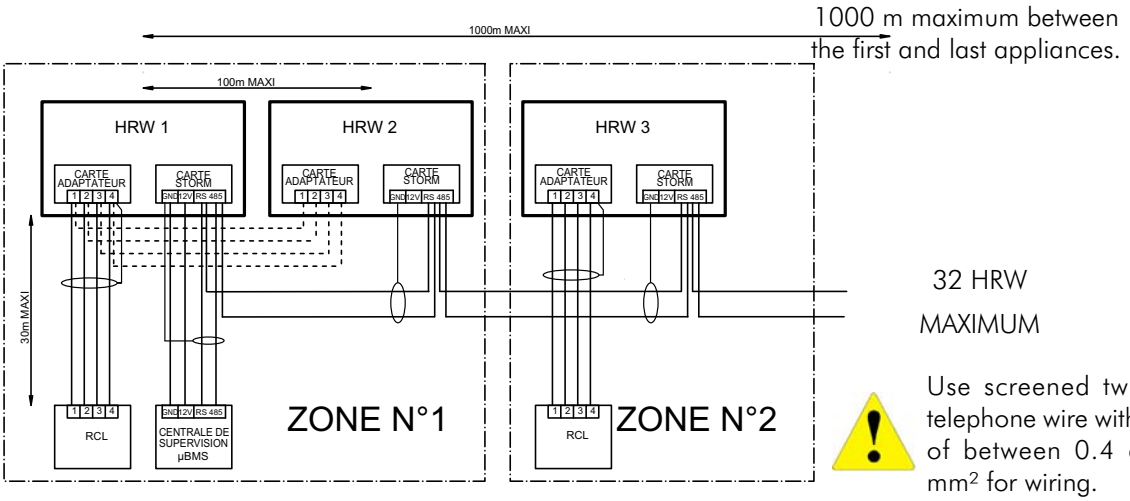

Note: When the *µ*BMS supervision is used, all the units must have an address (Refer to "Addressing Procedure").

ADDRESSING PROCEDURE

When the μBMS supervision module is connected, each appliance must be allocated an address in accordance with the procedure described below.

Connect the supervision module.

1. Switch on the mains power supply to all the appliances.
2. Select unit 1 with the UP and DOWN arrows on the μBMS.

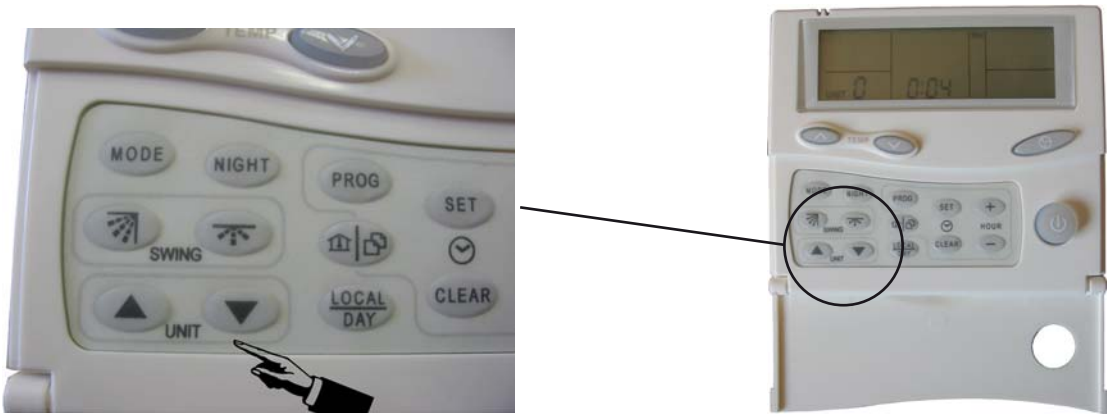

3. When unit N°1 is selected, press the key on the adapter board until the LED flashes.
4. Press the ON/OFF key.

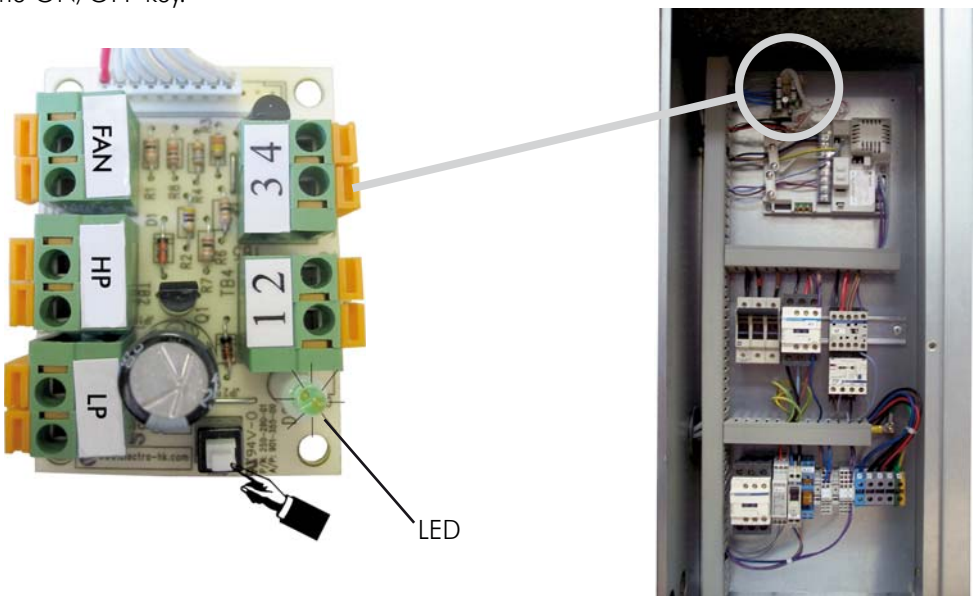

3N400V ~ 50Hz

5. Address N°1 has now been memorised in the first appliance.
6. For the second appliance, press the ON/OFF key then select unit N°2 with the UP and DOWN arrows on the μBMS , then restart the procedure described above.
7. When the addressing of all the units is complete, switch off the mains power supply and then switch it back on.

Note: It is possible to programme several appliances with the same address.

MOTORISED WATER VALVE

The OFAN output (marked 6 on the STORM PCB) can be used for a 230 V connection to supply a motorised water valve (the valve motor capacity must not exceed 250 Watts).

When this valve is installed on the system, it limits main circulation pump energy consumption as well as limiting the overall pressure losses in the hydraulic circuit.

Initially closed, the valve opens 30 seconds before the compressor starts and closes 20 seconds after it stops.

When a High or Low temperature limit alarm code is activated, the compressor stops and the motorised valve closes. After 30 minutes, the valve re-opens for 1 minute to allow for water outlet temperature measurement. This operation will be repeated every 30 minutes until the water outlet temperature measurement authorises, at logic level, the compressor to restart.

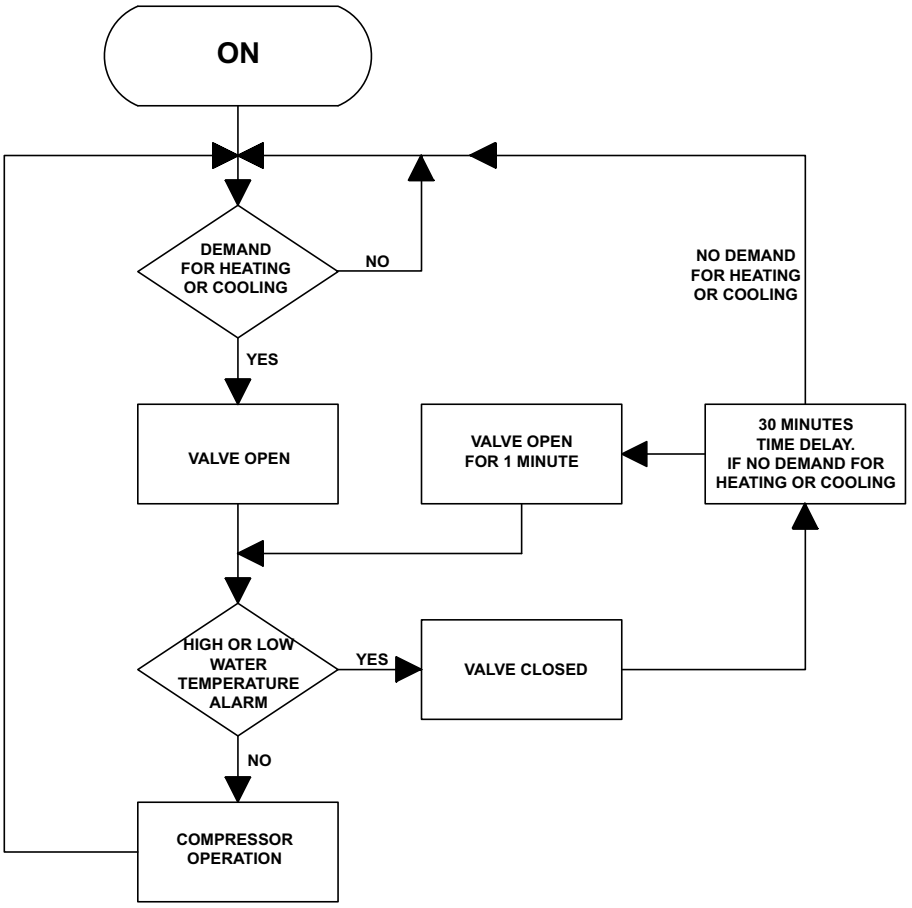

FINAL TASKS

Place the plugs back on the valves and check that they are properly tightened.

If needed, fix the cables and the pipes on the wall with clamping collars.

Operate the air conditioner in the presence of the user and explain all functions.

Show him how to remove, clean and place back the filters.

STARTING - RECOMMENDATIONS - SETTINGS

1. Check that all the water valves are open and that water circulates in the appliance before making any demand for heating or cooling.
2. Ensure that the units are connected correctly to the mains power supply (Refer to "Electrical connection" and "Wiring diagrams") for the type of supply.
3. Before attempting any start-up, ensure that the air and water temperatures are within the appliance's operating limits (Refer to "Operating limits").
4. Rotate the fan by hand to ensure that it turns freely and that the fan turbine is properly attached to the motor shaft.
5. Check that the condensates drainage pipe is properly attached and free of any blockages.
6. Check the correct positioning of the filters and that they a clean and accessible.
7. Ensure that the finned heat exchanger surfaces are clean. Clean if required.
8. Check that the connection hoses are correctly fitted and ensure that the appliance's water circuit has been correctly bled of any air.
9. Ensure that no Alarm code is displayed when the mains power supply is switched on (Refer to the "Alarm code" chart).
10. Carry out the usual checks on the main water loop and particularly to ensure that the water circulation pump operates correctly.

Non-compliance with this rule may result in irreversible damage to the plate exchanger. In addition, we recommend the use of a flow controller on the units' inlet pipe (not supplied).

COMMISSIONING

After performing all the above-mentioned checks, proceed with creating a demand for Cooling and Heating or vice versa.

DEMAND FOR COOLING

1. With the MODE key on the RCL control module, select COOL mode and then set the minimum temperature with the UP and DOWN arrows. The ambient temperature should be within the operating limits (Refer to "Operating limits"). In the same way, during the pre-commissioning checks, the exchanger pump(s) water loop inlet temperature should be within the limits corresponding to each operating mode (Refer to "Operating limits").

   Reminder: if one of these factors is situated at its minimum or maximum level, the other should be situated at a normal level in order to ensure the unit's correct and normal operation.
2. Ensure that the thermostat is connected properly and set the set temperature below the ambient temperature of the zone to be cooled. After 3 minutes, the compressor starts operating.
3. When the appliance has been operating for a few minutes, check the presence of cold air at the blowing grille.
4. When the appliance has been operating for a few minutes, check the temperature of the unit's outlet water. Generally, this should be around 5°C above the unit's water loop inlet temperature. A variance lower than 3.5°C indicates that the water flow is too high, whilst a variance higher than 8°C indicates that the water flow is too low.
5. Adjust the isolation/balancing valve on the outlet water pipe to obtain the appliance's nominal water flow (Refer to the Maker's Plate)
6. Check that the condensates drainage system is working properly and check that a siphon is included in the drainage line.
7. Check for the absence of vibrations and water leaks.
8. When all the above tests have been completed, adjust the system to maintain the desired comfort level.

DEMAND FOR HEATING

1. With the MODE key on the RCL control modules, select HEAT mode and then set the maximum temperature with the UP and DOWN arrows. The ambient temperature should be within the operating limits (Refer to "Operating limits"). In the same way, during the pre-commissioning checks the exchanger pump(s) water loop inlet temperature should be within the limits corresponding to each operating mode (Refer to "Operating limits").

   Reminder: if one of these factors is situated at its minimum or maximum level, the other should be situated at a normal level in order to ensure the unit's correct and normal operation.

2. Ensure that the thermostat is connected properly and set the set temperature above the ambient temperature of the zone to be cooled. After 3 minutes, the compressor starts operating.
3. When the appliance has been operating for a few minutes, check the presence of hot air at the blowing grille.
4. When the appliance has been operating for a few minutes, check the temperature of the unit's outlet water. Generally, this should be around 3°C below the unit's water loop inlet temperature. A variance lower than 2°C indicates that the water flow is too high, whilst a variance higher than 6°C indicates that the water flow is too low.
5. Adjust the isolation/balancing valve on the outlet water pipe to obtain the appliance's nominal water flow (Refer to the Maker's Plate)
6. Check that the condensates drainage system is working properly and check that a siphon is included in the drainage line.
7. Check for the absence of vibrations and water leaks.
8. When all the above tests have been completed, adjust the system to maintain the desired comfort level.

Note: If the unit does not operate, perform a fault diagnosis (Refer to "Maintenance and servicing"). If the fault analysis does not enable the cause of the problem(s) to be determined or if the unit still does not operate, contact a qualified after-sales technician to obtain a correct diagnosis and to repair the equipment.

Take care

It is not the manufacturer's policy to make recommendations in terms of water treatment (please contact a specialised water treatment company).

However, given the critical nature of this subject, particular care should be taken to ensure that, if treatment is required, it works effectively.

Using untreated or unsuitable water leads to excessive clogging inside the coil tubes (earth and mud deposits, corrosion, etc.) with major consequences on the thermal efficiency of the unit and irreversible damage to the equipment.

The manufacturer and its representative decline all responsability in the event of untreated or incorrectly treated water being used.

MAINTENANCE AND SERVICING

1. Normal maintenance of the appliances is generally limited to replacing filters.
2. The filters must be changed at regular intervals. The frequency is dependent on the specific application conditions. Certain installations, for example in hotels where there large amounts of fluff due to the frequent bedding changes and the presence of fitted carpets, require more frequent filter changes. It is recommended that the filters are checked every 60 days during the first year of operation in order to determine the frequency required. If it is not possible to see light through the filter when it is held up to the sun or in front of a strong light, the filter must be replaced. A more rigorous standard of cleanliness may be required.
3. The condensates tray must be checked annually and cleaned and rinsed if necessary.
4. On commissioning, a record of voltages, current draw and temperature variances should be made. Thereafter, on an annual basis further measurements can be compared to these initial values and will be useful for giving an overall indication for the equipment's general condition.
5. The activation of the unit's safety protection devices is usually caused by air or water problems. These forced stoppages are a normal protection measure. Ensure that there is no dirt or debris in the air or water circuits. Check the water and air temperatures and flows (clogged filters).

WARNING

BEFORE COMMENCING ANY WORK ON THE APPLIANCE,

YOU MUST ENSURE THAT THE MAINS POWER SUPPLY IS OFF

AND THAT THERE IS NO POSSIBILITY OF IT BEING ACCIDENTALLY TURNED BACK ON.

FAN DRIVE SYSTEM

Fan shaft and motor bearings are of permanently lubricated, sealed type and require no regular maintenance other than a check on their general condition. The fan belt tension should be checked regularly and belt surfaces inspected for cracks or excessive wear.

Belt alignment

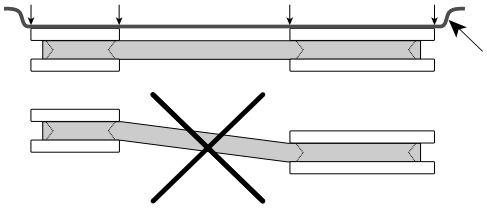

For a quick check, make sure that the small rope touch each end of the pulleys as shown on drawing opposite.

Belt tensioning

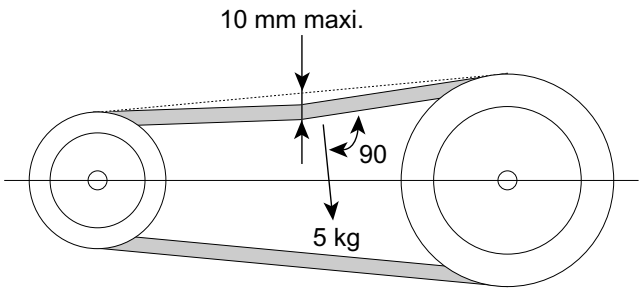

FAULT FINDING

NEITHER THE FAN NOR THE COMPRESSOR OPERATE

1. The system is in alarm mode when the mains power supply is switched on. Check the points mentioned in the "Alarm codes" chart for diagnosis.
2. Check the wiring of the remote control.
3. Check that the appliance is properly set in COOL, HEAT or FAN mode.
4. Check the condition of the fuse or the mains power supply. Check the compressor and fan wiring.
5. Check for any loose or broken wiring and tighten or replace as required.
6. The mains supply voltage is too low. If this is the case, check the supply conditions with the electricity provider.

VENTILATION (FAN) MODE OPERATES BUT THE COMPRESSOR DOES NOT OPERATE

1. For Single Phase versions, check the current available and the wiring.
2. Check for any loose or broken wiring and tighten or replace as required.
3. Check that the machine is not in alarm mode. Refer to "Alarm codes" chart for diagnosis.
4. Check the thermostat's set temperature point.
5. The compressor may be grounded, in which case replace the compressor.
6. The internal compressor circuit is open circuit, perform a continuity test with an Ohmmeter. If the circuit is open circuit, replace the compressor.

INSUFFICIENT COOLING OR HEATING PRODUCTION

1. Check that the thermostat is properly located in the zone to be heated or cooled and that it is not near to a source of cold or heat that may influence the reading.
2. Check the proper operation of the Return Air Temperature (RAT) sensor, located on the fin exchanger.
3. Airflow is insufficient. Check for clogged filters. Clean and replace as required.
4. The cycle inversion valve may be defective and be creating a refrigerant by-pass. If the unit does not produce heat, check the wiring of the inversion valve coil.
5. Check the proper operation of the pressure relief valve.
6. Measure the water flow on the water loop.
7. Check the configuration of the appliance.

INSUFFICIENT WATER FLOW AT THE LEVEL OF THE PLATE EXCHANGER.

1. Check for proper water circulation at the level of the water circulation pump.
2. If a valve is fitted to the water loop, check that it is open.
3. Check that air is not being sucked into the hydraulic system. Bleed the system if required.

APPEARANCE OF WATER DROPLETS IN THE APPLIANCE

1. Check that the condensates drainage pipe is not blocked and that water drains away normally.
2. Check the correct operation of the condensates tray anti-overflow float (Refer to «Alarm codes» chart).
3. Check that the float moves freely on its rod. If this is not the case, clean the tray and the float.
4. Check the cleanliness of the filters.

APPEARANCE OF ABNORMAL NOISES AND VIBRATIONS IN THE CASING

1. Check that the turbine is not rubbing against the scroll and that the latter is not damaged. Replace as required.
2. Check that the turbine has not worked loose on its shaft. Centre the turbine and tighten it as required.
3. Check that the compressor is mounted correctly on its shock pads.
4. Check that no part of the turbine rubs against the compressor or any other surface. Reposition slightly as required.
5. Check that all the attachment screws are tightened properly.
6. Check that air is not being sucked into the hydraulic system.
7. Test that the relays open and close correctly. Replace as required.

ALARM CODES

COOLING MODE

FAULT	LED ALARM CODE	POSSIBLE CAUSE	CORRECTIVE ACTION	ACTION FOR CANCELLING FAULT CODE AFTER CORRECTION
High pressure	100000000	Hot water loop temperature too high, above 50°C.	Test the water temperature at the level of the main loop.	Cut the mains power supply for 5 seconds, and then reconnect.
		Insufficient water flow or no water flow at the level of the appliance.	Test the flow from the pump on the main loop.	
		Faulty pressure differential	Check electrical connections.	
		Pressure sensor defective, broken wire or short circuit.	Check the proper connection of the HP sensor.	
Low pressure	110000000	Insufficient airflow.	Check proper fan operation.	The fault code is automatically cancelled after correction (***). The LED stops flashing and the green light remains on.
		Refrigerant leak.	Find and repair any leaks on the pipe circuits.	
		Clogged filters.	Clean or replace the filters	
		Pressure sensor defective, broken wire or short circuit.	Check the proper connection of the LP sensor and/or conduct a continuity test.	
		Too high hydraulic pressure loss due to an obstruction in the intake duct.	Check the aeraulic network.	
Fan thermal overload protection	111000000	Clogged filters.	Clean the filters.	The fault code is automatically cancelled after correction (***). The LED stops flashing and the green light remains on.
		Lack of airflow.	Check the pressure losses on the air intake duct.	
		Broken wire at the level of the adapter board or bad contact.	Rewire correctly (c.f. appliance wiring diagram)	
		Defective contact at the level of the phase controller board.	Check the connections at the level of the phase controller. Replace if defective.	
		Intake air temperature outside operating limits.		
		Seized or damaged motor.	Check current draw. Replace motor if defective.	
Low water temperature limit	111110000	Hot water loop temperature < 15°C	Test the temperature at the level of the main loop.	The fault code is automatically cancelled after correction (***). The LED stops flashing and the green light remains on.
		Bad connection of sensor to PCB or defective sensor.	Test the connections.	
		Insufficient water flow.	Test the water flow at the level of the main loop.	
High water temperature limit	111111000	Hot water loop temperature > 50°C.	Test the temperature at the level of the loop.	The fault code is automatically cancelled after correction (***).
		Insufficient water flow.	Test the water flow at the level of the main loop.	The LED stops flashing and the green light remains on.
Anti-freeze protection	111111100	Insufficient airflow.	Test fan operation and pressure losses on the air intake duct network.	The fault code is automatically cancelled after correction.
		Clogged filters.	Clean or replace.	The LED stops flashing and the green light remains on.
		Refrigerant leak.	Find and repair any leaks on the pipe circuits.	
		Return air temperature too low	Outside operating limits.	
Condensate tray overflow protection	111111110	Condensate drainage system blocked	Clean the condensates tray.	The fault code is automatically cancelled after correction.
		Too high aeraulic pressure loss due to an obstruction in the intake duct.	Test the aeraulic network pressure losses.	
		Completely clogged filters.	Clean or replace the filters.	The LED stops flashing and the green light remains on
		The float is not properly connected to the PCB, broken wire.	Check the connections.	
Other Alarms	111111111	ICT, LWT, RT sensor connection problem, tray overflowing, broken wire or short circuit.	Check the connections at the level of the PCB and/or check for broken wires.	The fault code is automatically cancelled after correction. The LED stops flashing and the green light remains on.
		Cycle inversion valve electrical fault.	Check the electrical connections	
No alarm - unit ON	ON			
No alarm - unit OFF or on STAND-BY	OFF			

(**) This case only concerns installations where the valve is fitted on the water loop upstream of the machine.

(***) Lockout if 3 faults within 1 hour. Cut the mains power supply for 5 seconds, and then reconnect.

Note: More than 2 alarm codes can be activated at the same time. Only the last code detected will be visible on the RCL control module or on the adapter board. After the source of the first alarm code is resolved, the second code will appear, and so on until all the faults are cancelled and until the LED stops flashing.

HEATING MODE

FAULT	LED LARM CODE	POSSIBLE CAUSE	CORRECTIVE ACTION	ACTION FOR CANCELLING FAULT CODE AFTER CORRECTION
High pressure	100000000	Insufficient airflow	Check proper fan operation.	Cut the mains power supply for 5 seconds, and then reconnect.
		Clogged filters.	Clean or replace the filters.	
		Too high aeraulic pressure loss due to an obstruction in the intake duct.	Test the aeraulic network.	
		Insufficient water flow or no water flow at the level of the appliance.	Test the flow from the pump on the main loop.	
		Stop cock or water inlet valve shut (**)	Test the valve electrical supply. Test the direction of flow. Open the valve.	
		Faulty pressure differential	Check electrical connections.	
		Pressure sensor defective, broken wire or short circuit.	Check the proper connection of the HP sensor and/or conduct a continuity test.	
Low pressure	110000000	Water loop temperature outside operating limits, below 8°C.	Test the water temperature at the level of the main loop.	The fault code is automatically cancelled after correction (***). The LED stops flashing and the green light remains on.
		Insufficient water flow in the appliance.	Test the pump flow at the level of the main loop.	
		Pressure sensor defective, broken wire or short circuit.	Check the proper connection of the LP sensor and/or conduct a continuity test.	
		Refrigerant leak.	Find and repair any leaks on the pipe circuits.	
		Water inlet valve closed (**)	Test the valve electrical supply. Test the direction of flow.	
Fan thermal overload protection	111000000	Clogged filters.	Clean the filters	The fault code is automatically cancelled after correction (***). The LED stops flashing and the green light remains on.
		Lack of airflow.	Check the pressure losses on the air intake duct.	
		Broken wire at the level of the adapter board or bad contact.	Rewire correctly (c.f. appliance wiring diagram)	
		Defective contact at the level of the phase controller board.	Check the connections at the level of the phase controller. Replace if defective.	
		Intake air temperature outside operating limits.		
		Seized or damaged motor.	Check current draw. Replace motor if defective.	
Anti-freeze protection(*)	1111000000	Water temperature < 2 °C	Test the main water loop temperature.	The fault code is automatically cancelled after correction. The LED stops flashing and the green light remains on.
		Return water temperature sensor defective, as no fault code 111110000 detected.	Replace the LWT return water temperature sensor.	
Low water temperature limit	111110000	Hot water loop temperature < 8°C .	Test the temperature at the level of the main loop.	The fault code is automatically cancelled after correction (***). The LED stops flashing and the green light remains on.
		Insufficient water flow.	Test the water flow at the level of the main loop.	
High water temperature limit	111111000	Hot water loop temperature > 32°C	Test the temperature at the level of the main loop.	The fault code is automatically cancelled after correction (***). The LED stops flashing and the green light remains on.
		Insufficient water flow.	Test the water flow at the level of the main loop.	
Condensate tray overflow protection	111111110	The float is not properly connected to the PCB, broken wire.	Check the connections and/or the PCB.	The fault code is automatically cancelled after correction. The LED stops flashing and the green light remains on.
		The float is blocked in the high position.	Check the position of the float, clean as required.	
Other Alarms	111111111	ICT, LWT, RT sensor connection problem, tray overflowing, broken wire or short circuit.	Check the connections at the level of the PCB and/or check for broken wires.	The fault code is automatically cancelled after correction. The LED stops flashing and the green light remains on.
		Cycle inversion valve electrical fault.	Check the electrical connections	
No alarm unit ON	ON			

(*) The plate exchanger has dual protection to avoid any risk of icing.

(**) This case only concerns installations where the valve is fitted on the water loop upstream of the machine.

(***) Lockout if 3 faults within 1 hour. Cut the mains power supply for 5 seconds, and then reconnect.

1) Water temperature too low < 8°C

2) Low presure < 1.5 bars

Note: More than 2 alarm codes can be activated at the same time. Only the last code detected will be visible on the RCL control module or on the adapter board. After the source of the first alarm code is resolved, the second code will appear, and so on until all the faults are cancelled and until the LED stops flashing.

Example: 111 000 000

- 1 corresponds to one green flash of the LED situated on the adaptor board (see page 23) or ON the RCL (see page 17)
- 0 indicates that there is no flash.

In this precise case, there will be 3 green flashes, then the flashing will stop for a while (a few seconds), then there will be 3 further green flashes and so on until the fault is cancelled. Then the green LED is off in OFF mode, and fixed on in ON mode.

IN-WARRANTY RETURN MATERIAL PROCEDURE

Material must not be returned without permission of our After Sales Department.

To return the material, contact your nearest sales office and ask for a "return voucher". This return voucher shall be sent out with the returned material and shall contain all necessary information concerning the problem encountered.

The return of the part does not constitute an order for replacement. Therefore, a purchase order must be entered through your nearest distributor or regional sales office. The order should include part name, part number, model number and serial number of the unit involved.

Following our personal inspection of the returned part, and if it is determined that the failure is due to faulty material or workmanship, and in warranty, credit will be issued on customer's purchase order. All parts shall be returned to our factory, transportation charges prepaid.

SERVICE AND SPARE PARTS ORDER

The model number, the confirmation number and the unit serial number indicated on the name plate must be provided whenever service works or spare parts are ordered.

For any spare part order, indicate the date of unit installation and date of failure. Use the part number provided by our service spare parts, if it not available, provide full description of the part required.

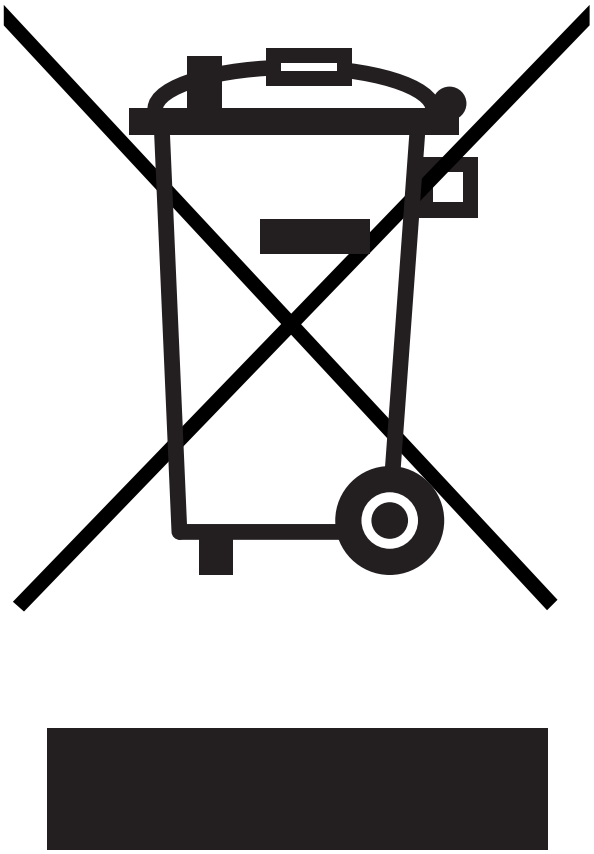

The meaning of the above logo representing a crossed-out wheeled bin is that this air conditioning unit must not be disposed of as unsorted municipal waste but should be collected separately as WEEE (Waste Electrical and Electronic Equipment).

The presence of hazardous substances in electrical and electronic equipment or an improper use of such equipments or of parts thereof as well as the hazards of not separating WEEE from unsorted domestic waste, may affect the environment and human health.

As an End User, you are required to place WEEE in a collection separate from that for unsorted domestic waste. Please contact a point of sale or installer to find out the collection system available at your local community. You may return your old air conditioning unit for free to the point of sale or the installer when purchasing a new one.

As an End User, it is your role to contribute to the reuse, recycling and other forms of recovery of such wastes so as to reduce the disposal of waste. This will help preserve your environment.

APPENDIX
ANNEXE
ANLAGE
ALLEGATO
ANEXO

WIRING DIAGRAM
SCHEMAS ELECTRIQUES
STROMLAUFPLANS
SCHEMA ELETRICO
ESQUEMA ELECTRICO

TAKE CARE!

These wiring diagrams are correct at the time of publication. Manufacturing changes can lead to modifications. Always refer to the diagram supplied with the product.

ATTENTION

Ces schémas sont corrects au moment de la publication. Les variantes en fabrication peuvent entraîner des modifications. Reportez-vous toujours au schéma livré avec le produit.

ACHTUNG!

Diese Stromlaufplans sind zum Zeitpunkt der Veröffentlichung gültig. In Herstellung befindliche Varianten können Änderungen mit sich bringen. In jedem Fall den mit dem Produkt gelieferten Stromlaufplan hinzuziehen.

ATTENZIONE !

Questi schemi sono corretti al momento della pubblicazione. Le varianti apportate nel corso della fabbricazione possono comportare modifiche. Far sempre riferimento allo schema fornito con il prodotto.

ATENCIÓN !

Esto esquemas son correctos en el momento de la publicación. Pero las variantes en la fabricación pueden ser motivo de modificaciones. Remítase siempre al esquema entregado con el producto.

POWER SUPPLY MUST BE SWITCHED OFF BEFORE STARTING TO WORK IN THE ELECTRIC CONTROL BOXES!

MISE HORS TENSION OBLIGATOIRE AVANT TOUTE INTERVENTION DANS LES BOITIERS ELECTRIQUES.

VOR JEDEM EINGRIFF AN DEN ANSCHLUßKÄSTEN UNBEDINGT DAS GERÄT ABSCHALTEN!

PRIMA DI OGNI INTERVENTO SULLE CASSETTE ELETTRICHE ESCLUDERE TASSATIVAMENTE L'ALIMENTAZIONE !

PUESTA FUERA DE TNESIÓN OBLIGATORIA ANTES DE CUALQUIER INTERVENCIÓN EN LAS CAJAS ELÉCTRICAS!

096 - 120

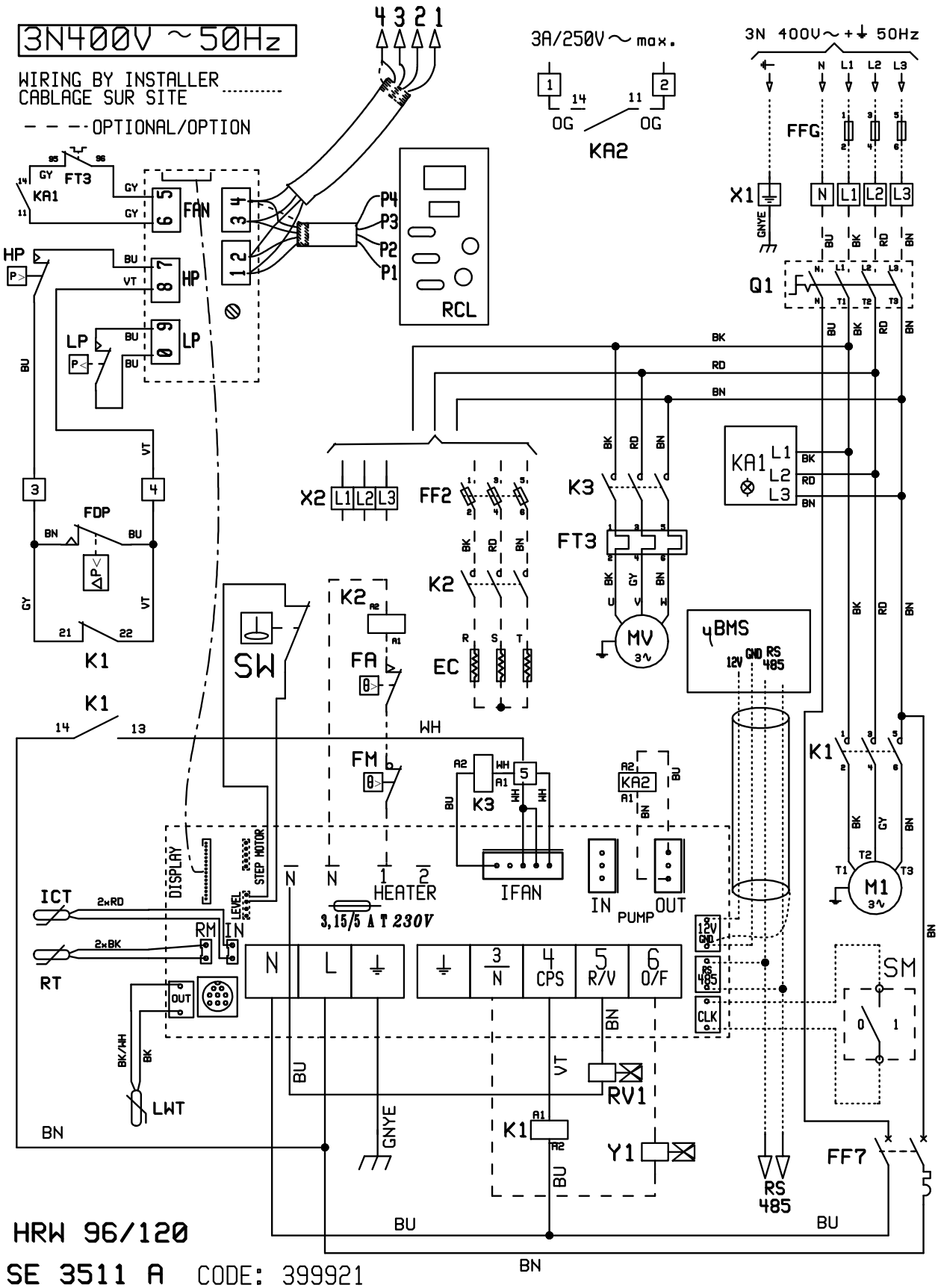
3N400V ~50Hz
WIRING BY INSTALLER
CABLAGE SUR SITE
OPTIONAL/OPTION
3A/250V ~ max.
KA2
3N 400V ~ + 50Hz
FFG
X1
Q1
FT3
KA1
FAN
HP
LP
RCL
P4
P3
P2
P1
FDP
K1
X2
FF2
K3
FT3
MV
K2
EC
FA
FM
SW
BMS
12V
GND
RS 485
M1
IFAN
IN
PUMP
OUT
HEATER
3,15/5 A T 230V
DISPLAY
STEP MOTOR
LEVEL
ICT
RT
RM
IN
OUT
LWT
N
L
3 N
4 CPS
5 R/V
6 O/F
RV1
Y1
SM
CLK
FF7
HRW 96/120
SE 3511 A CODE: 399921
WIRING DIAGRAM LEGEND: N764

EC Compliance declaration

Under our own responsibility, we declare that the product designated in this manual comply with the provisions of the EEC directives listed hereafter and with the national legislation into which these directives have been transposed.

Déclaration CE de conformité

Nous déclarons sous notre responsabilité que les produits désignés dans la présente notice sont conformes aux dispositions des directives CEE énoncées ci- après et aux législations nationales les transposant.

EG-Konformitätserklärung

Wir erklarën in eigener Verantwortung, das die in der vorliegenden Beschreibung angegebenen Produkte den Bestimungen der nachstehend erwähnten EG-Richtlinien und den nationalen Gesetzesvorschriffen entsprechen, in denen diese Richtinien umgesetz sind.

Dichiarazione CE di conformità

Dichiariamo, assurmendone la responsasabilità, che i prodotti descritti nel presente manuale sono conformi alle disposizioni delle direttive CEE di cui sott e alle lagislazionni nazionali che li recepiscono

Declaración CE de conformidad

Declaramos, bajo nuestra responsabilidad, que los productos designados en este manual son conformes a las disposiciones de las directivas CEE enunuciadas a continuacion, asi como a las legislaciones nacionales que las contemplan.

HRW 096 - 120

MACHINERY DIRECTIVE 98 / 37 / EEC
LOW VOLTAGE DIRECTIVE (DBT) 2006 / 95 / EEC
ELECTROMAGNETIC COMPATIBILITY DIRECTIVE 89 / 336 / EEC AMENDED BY DIRECTIVE 92 / 31 / EEC AND 93 / 68 / EEC
PRESSURISE EQUIPMENT DIRECTIVE (DESP) 97 / 23 / EEC
SUB-MODULE A CATEGORY I

DIRECTIVE MACHINES 98 / 37 C.E.E.
DIRECTIVE BASSE TENSION (DBT) 2006 / 95 / C.E.E.
DIRECTIVE COMPATIBILITE ELECTROMAGNETIQUE 89 / 336 / C.E.E. AMENDEE PAR DIRECTIVE 92 / 31 / C.E.E ET 93 / 68 / C.E.E
DIRECTIVE DES EQUIPEMENTS SOUS PRESSION (DESP) 97 / 23 C.E.E.
SOUS-MODULE A CATEGORIE I

RICHTLINIE MASCHINEN 98 / 37 / EG
RICHTLINIE NIERDERSPANNUNG (DBT) 2006 / 95 / EG
RICHTLINIE ELEKTROMAGNETISHE VERTRÄGLICHKEIT 89 / 336 / EG ABGEÄNDERT DURCH DIE RICHTLINIE 92 /31 / EG UND 93 / 68 / EG
RICHTLINIE FÜR AUSRÜSTUNGEN UNTER DRUCK (DESP) 97 / 23 / EG
UNTER MODUL A, KATEGORIE I

DIRETTIVA MACHINE 98 / 37 / CEE
DIRETTIVA BASSA TENSIONE (DBT) 2006 / 95 / CEE
DIRETTIVA COMPATIBILITA ELETTROMAGNATICA 89 / 336 / CEE EMENDATA DALLA DIRETTIVA 92 /31 / CEE E 93 / 68 / CEE
DIRETTIVA DEGLI IMPIANTI SOTTO PRESSIONE (DESP) 97 / 23 / CEE
SOTTOMODULO A, CATEGORIA I

DIRECTIVA MAQUIAS 98 / 37 / CEE
DIRECTIVA BAJA TENSION (DBT) 2006 / 95 / CEE
DIRECTIVA COMPATIBILIDAD ELECTROMAGNETICA 89 / 336 / CEE ENMENDATA POR LA DIRECTIVA 92 / 31 / CEE Y 93 / 68 / CEE
DIRECTIVA DE LOS EQUIPOS A PRESION (DESP) 97 / 23 / CEE
BAJA MODULO A, CATEGORIA I

And that the following paragraphs of the harmonised standards have been applied.
Et que les paragraphes suivants les normes harmonisées ont été appliqués.
Und dass die folgenden Paragraphen der vereinheitlichten Normen Angewandt wurden.
E che sono stati applicati i seguenti paragraphi delle norme armonnizzate.
Y que se han aplicado los siguientes apartados de las normas armonizadas.

EN 60 335-1
EN 55 014-1
EN 60 335-2-40
EN 55 014-2
EN 60 204-1
EN 378

A Tillières Sur Avre
27570 - FRANCE
Le: 08/04/2007
Franck Bailly
Quality Manager
ACE Industrie

ACE Industrie

As part of our ongoing product improvement programme, our products are subject to change without prior notice. Non contractual photos.

Dans un souci d'amélioration constante, nos produits peuvent être modifiés sans préavis. Photos non contractuelles.

ACE Industrie
Route de Verneuil
27570 Tillières-sur-Avre
France

✆ : +33 (0)2 32 60 61 00

🖷 : +33 (0)2 32 32 55 13