Issued January 2002 No. U-042

LOSSNAY

HAND BOOK

(For EUROPE and OTHERS)

FOR DEALERS

Model:

LGH-15RX3-E
LGH-25RX3-E
LGH-35RX3-E
LGH-50RX3-E
LGH-80RX3-E
LGH-100RX3-E
LGH-100RX3-E-60
LGH-150RX3-E
LGH-200RX3-E
LGH-200RX3-E-60

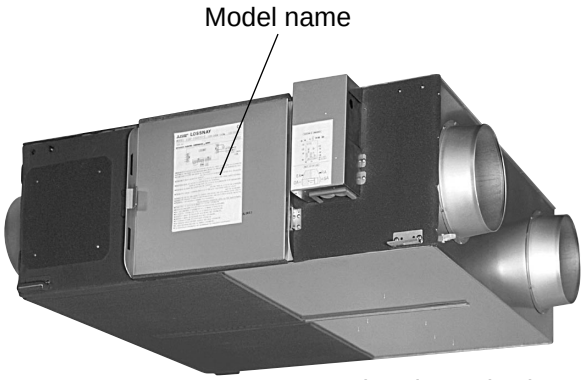

The picture is shown LGH-100RX3-E

Notice:
The term of validity is for a year from the issued date.

MITSUBISHI ELECTRIC CORPORATION

Contents

Safety precautions

- Please take a time to read the following safety precautions before commencing with the maintenance work.
- They will help to maintain the Lossnay properly and safely.

⚠ **Warning**	Mis-operation could result in serious injury or death.
⚠ **Caution**	Mis-operation could result in injury and/or damage to property.

The symbols used in have the following meanings.

⚠ **Electric shock**	⃠ **Prohibited**	❗ **Instructions must be followed**

⚠ Warning

◇ **Electric shock**
If you have to inspect the circuitry while power is being conducted, be sure you do not touch the live parts.
(Failure to heed this warning may result in electric shock.)

◇ **Shut off the power supply**
Be sure to shut off the breaker before disassembling the unit for repair.
(Failure to heed this warning may result in electric shock.)

◇ **Modification is prohibited**
Do not modify the unit.
(Failure to heed this warning may result in electric shock, bodily injury or fire.)

◇ **Use proper parts and tools**
For repair, use the parts listed in the service parts list of the applicable unit model and use the proper tools.
(Failure to heed this warning may result in electric shock, bodily injury or fire.)

◇ **Proper electric work**
The specified electric wires should be used for electric work, which should be done in accordance with the "Electrical Installation Engineering Standard," "Indoor Wiring Regulations," and the Installation Work Guide.
(Failure to heed this warning may result in electric shock or fire.)

◇ **Replace damaged and/or degraded parts**
Be sure to replace the power-supply cord and lead wire in the event that they are damaged and degraded.
(Failure to heed this warning may result in electric shock and fire.)

◇ **Check insulation**
Be sure to measure the insulation resistance once the repair work is completed, and turn on the power supply after verifying that insulation resistance of 1 MΩ or more is obtained.
(If an insulation problem exists, it may result in electric shock.)

⚠ Caution

◇ **Caution for bodily injury**
Do not perform any work at a location where your feet are unstable.
(Failure to heed this caution may result in bodily injury.)

Request

- Inspect the grounding wire and repair it if incomplete.

- Make sure that the product operates correctly after maintenance.

1. Specifications

Model		LGH-15RX3-E											
Control signal		Serial single communication (M-NET transmission)											
Heat recovery system		Air-to-air total heat (sensible heat + latent heat) recovery											
Heat recovery module material		Partition, spacing plate-special treated paper											
Cladding		Galvanized steel sheet											
Heat insulating material		Self-extinguishing urethane foam											
Motor		Totally enclosed capacitor permanent split-phase induction motor, 4 poles, 2 units											
Blower		180 mm dia.centrifugal fan											
Filter material		Non-woven fabrics filter (Gravitational method 82 %)											
Operating environment (Supply air)		-10 °C to 40 °C, RH 80 % or less (-15 °C (*1) to +40 °C, RH 80 % or less)											
Functions		Lossnay ventilation/Bypass ventilation High (Extra high)-Low switching											
Weight		17 kg											
Power supply		Single phase 220-240 V/50 Hz						Single phase 220 V/60 Hz					
Ventilation mode		Lossnay ventilation			Bypass ventilation			Lossnay ventilation			Bypass ventilation		
Fan speed		Extra high	High	Low	Extra high	High	Low	Extra high	High	Low	Extra high	High	Low
Current	[A]	0.48-0.52	0.34-0.35	0.24-0.25	0.48-0.52	0.34-0.36	0.24-0.25	0.57	0.39	0.27	0.58	0.40	0.27
Power consumption	[W]	104-122	74-83	52-59	104-123	74-85	52-59	119	85	58	120	85	58
Air volume	[m³/h]	150	150	120	150	150	120	150	150	110	150	150	110
	[L/s]	42	42	33	42	42	33	42	42	31	42	42	31
External static pressure	[mmH2O]	9.2	4.1	2.6	9.2	4.1	2.6	12.2	6.1	3.6	12.2	6.1	3.6
	[Pa]	90	40	25	90	40	25	120	60	35	120	60	35
Temperature recovery efficiency	[%]	77	77	80	-	-	-	77	77	81	-	-	-
Enthalpy recovery efficiency (%)	Heating	69	69	72	-	-	-	69	69	73	-	-	-
	Cooling	62.5	62.5	66	-	-	-	62.5	62.5	67	-	-	-
Noise (dB)	Measured at 1.5 m under the center of panel	26-27	24-25	21-22	26-27	24-25	21-22	28	25	22	28	25.5	22
	Air outlets	33-34	31-32	26-27	33-34	31-32	26-27	35	32	27	35	32.5	27
Starting current		Under 0.8/0.7 A or less											
Insulation resistance		10 MΩ or more (500 V megger)											
Dielectric strength		AC 1500 V 1 minute											

Model		LGH-25RX3-E											
Control signal		Serial single communication (M-NET transmission)											
Heat recovery system		Air-to-air total heat (sensible heat + latent heat) recovery											
Heat recovery module material		Partition, spacing plate-special treated paper											
Cladding		Galvanized steel sheet											
Heat insulating material		Self-extinguishing urethane foam											
Motor		Totally enclosed capacitor permanent split-phase induction motor, 4 poles, 2 units											
Blower		180 mm dia.centrifugal fan											
Filter material		Non-woven fabrics filter (Gravitational method 82 %)											
Operating environment (Supply air)		-10 °C to 40 °C, RH 80 % or less (-15 °C (*1) to +40 °C, RH 80 % or less)											
Functions		Lossnay ventilation/Bypass ventilation High (Extra high)-Low switching											
Weight		21 kg											
Power supply		Single phase 220-240 V/50 Hz						Single phase 220 V/60 Hz					
Ventilation mode		Lossnay ventilation			Bypass ventilation			Lossnay ventilation			Bypass ventilation		
Fan speed		Extra high	High	Low	Extra high	High	Low	Extra high	High	Low	Extra high	High	Low
Current	[A]	0.51-0.54	0.42-0.44	0.25-0.27	0.52-0.55	0.42-0.45	0.25-0.27	0.63	0.49	0.28	0.63	0.50	0.27
Power consumption	[W]	111-128	91-104	54-64	112-130	91-105	54-64	131	106	60	132	107	58
Air volume	[m³/h]	250	250	165	250	250	165	250	250	150	250	250	150
	[L/s]	69	69	46	69	69	46	69	69	42	69	69	42
External static pressure	[mmH2O]	6.6	4.1	2.0	6.6	4.1	2.0	10.2	5.1	2.0	10.2	5.1	2.0
	[Pa]	65	40	20	65	40	20	100	50	20	100	50	20
Temperature recovery efficiency	[%]	78	78	83	-	-	-	78	78	84	-	-	-
Enthalpy recovery efficiency (%)	Heating	69	69	74	-	-	-	69	69	75	-	-	-
	Cooling	62.5	62.5	68	-	-	-	62.5	62.5	70	-	-	-
Noise (dB)	Measured at 1.5 m under the center of panel	26.5-27.5	25-26	21-22	27-28	25.5-26.5	21-22	28.5	25.5	21	29	26	21
	Air outlets	33.5-34.5	32-33	26-27	34-35	32.5-33.5	26-27	35.5	32.5	26	36	33	26
Starting current		Under 0.8/0.7 A or less											
Insulation resistance		10 MΩ or more (500 V megger)											
Dielectric strength		AC 1500 V 1 minute											

Model		LGH-35RX3-E											
Control signal		Serial single communication (M-NET transmission)											
Heat recovery system		Air-to-air total heat (sensible heat + latent heat) recovery											
Heat recovery module material		Partition, spacing plate-special treated paper											
Cladding		Galvanized steel sheet											
Heat insulating material		Self-extinguishing urethane foam											
Motor		Totally enclosed capacitor permanent split-phase induction motor, 4 poles, 2 units											
Blower		220 mm dia.centrifugal fan											
Filter material		Non-woven fabrics filter (Gravitational method 82 %)											
Operating environment (Supply air)		-10 °C to 40 °C, RH 80 % or less (-15 °C (*1) to +40 °C, RH 80 % or less)											
Functions		Lossnay ventilation/Bypass ventilation High (Extra high)-Low switching											
Weight		30 kg											
Power supply		Single phase 220-240 V/50 Hz						Single phase 220 V/60 Hz					
Ventilation mode		Lossnay ventilation			Bypass ventilation			Lossnay ventilation			Bypass ventilation		
Fan speed		Extra high	High	Low	Extra high	High	Low	Extra high	High	Low	Extra high	High	Low
Current	[A]	0.78-0.79	0.71-0.71	0.46-0.48	0.81-0.82	0.72-0.73	0.46-0.49	0.99	0.83	0.46	1.00	0.83	0.46
Power consumption	[W]	169-187	154-167	97-110	176-192	156-172	97-111	215	180	97	217	180	97
Air volume	[m³/h]	350	350	230	350	350	230	350	350	210	350	320	210
	[L/s]	97	97	64	97	97	64	97	97	58	97	89	58
External static pressure	[mmH2O]	15.3	7.1	2.6	15.3	7.1	2.7	19.4	5.1	2.0	19.4	5.1	2.0
	[Pa]	150	70	25	150	70	26	190	50	20	190	50	20
Temperature recovery efficiency	[%]	79	79	84	-	-	-	79	79	85	-	-	-
Enthalpy recovery efficiency (%)	Heating	68.5	68.5	75.5	-	-	-	68.5	68.5	76.5	-	-	-
	Cooling	65.5	65.5	72	-	-	-	65.5	65.5	73	-	-	-
Noise (dB)	Measured at 1.5 m under the center of panel	31-32	28-30	23-24	31.5-32.5	28-30	23-24	32.5	27	21	33.5	28	21
	Air outlets	39-40	35-37	29-30	39.5-40.5	35-37	29-30	40.5	34	27	41.5	35	27
Starting current		Under 1.6/1.5 A or less											
Insulation resistance		10 MΩ or more (500 V megger)											
Dielectric strength		AC 1500 V 1 minute											

Model		LGH-50RX3-E											
Control signal		Serial single communication (M-NET transmission)											
Heat recovery system		Air-to-air total heat (sensible heat + latent heat) recovery											
Heat recovery module material		Partition, spacing plate-special treated paper											
Cladding		Galvanized steel sheet											
Heat insulating material		Self-extinguishing urethane foam											
Motor		Totally enclosed capacitor permanent split-phase induction motor, 4 poles, 2 units											
Blower		222 mm dia.centrifugal fan											
Filter material		Non-woven fabrics filter (Gravitational method 82 %)											
Operating environment (Supply air)		-10 °C to 40 °C, RH 80 % or less (-15 °C (*1) to +40 °C, RH 80 % or less)											
Functions		Lossnay ventilation/Bypass ventilation High (Extra high)-Low switching											
Weight		33 kg											
Power supply		Single phase 220-240 V/50 Hz						Single phase 220 V/60 Hz					
Ventilation mode		Lossnay ventilation			Bypass ventilation			Lossnay ventilation			Bypass ventilation		
Fan speed		Extra high	High	Low	Extra high	High	Low	Extra high	High	Low	Extra high	High	Low
Current	[A]	0.94-0.95	0.89-0.90	0.57-0.60	0.95-0.96	0.90-0.93	0.58-0.60	1.21	1.05	0.60	1.22	1.05	0.60
Power consumption	[W]	204-225	193-214	123-142	206-228	196-221	125-142	262	231	130	263	228	130
Air volume	[m³/h]	500	500	350	500	500	350	500	500	300	500	500	300
	[L/s]	139	139	97	139	139	97	139	139	83	139	139	83
External static pressure	[mmH2O]	15.3	6.1	3.1	15.3	6.1	3.1	20.4	6.1	2.0	20.4	6.1	2.0
	[Pa]	150	60	30	150	60	30	200	60	20	200	60	20
Temperature recovery efficiency	[%]	77	77	82	-	-	-	77	77	83.5	-	-	-
Enthalpy recovery efficiency (%)	Heating	67	67	73	-	-	-	67	67	75	-	-	-
	Cooling	61.5	61.5	68	-	-	-	61.5	61.5	70	-	-	-
Noise (dB)	Measured at 1.5 m under the center of panel	32.5-33.5	30-31	23.5-24.5	33.5-34.5	30.5-31.5	23.5-24.5	32.5	28.5	23	33.5	29.5	23
	Air outlets	40.5-41.5	38-39	29.5-30.5	41.5-42.5	38.5-39.5	30.5-30.5	40.5	36.5	29	41.5	37.5	29
Starting current		Under 1.9/1.7 A or less											
Insulation resistance		10 MΩ or more (500 V megger)											
Dielectric strength		AC 1500 V 1 minute											

Model		LGH-80RX3-E											
Control signal		Serial single communication (M-NET transmission)											
Heat recovery system		Air-to-air total heat (sensible heat + latent heat) recovery											
Heat recovery module material		Partition, spacing plate-special treated paper											
Cladding		Galvanized steel sheet											
Heat insulating material		Self-extinguishing urethane foam											
Motor		Totally enclosed capacitor permanent split-phase induction motor, 4 poles, 2 units											
Blower		245 mm dia.centrifugal fan											
Filter material		Non-woven fabrics filter (Gravitational method 82%)											
Operating environment (Supply air)		-10 °C to 40 °C, RH 80 % or less (-15 °C (*1) to +40 °C, RH 80 % or less)											
Functions		Lossnay ventilation/Bypass ventilation High (Extra high)-Low switching											
Weight		61 kg											
Power supply		Single phase 220-240 V/50 Hz						Single phase 220 V/60 Hz					
Ventilation mode		Lossnay ventilation			Bypass ventilation			Lossnay ventilation			Bypass ventilation		
Fan speed		Extra high	High	Low	Extra high	High	Low	Extra high	High	Low	Extra high	High	Low
Current	[A]	1.8-1.8	1.7-1.7	1.4-1.4	1.7-1.7	1.6-1.6	1.4-1.4	2.1	1.9	1.5	2.0	1.8	1.4
Power consumption	[W]	392-418	368-396	304-332	370-394	348-374	298-330	455	405	315	425	390	305
Air volume	[m³/h]	800	800	670	800	800	670	800	800	660	800	800	660
	[L/s]	222	222	186	222	222	186	222	222	183	222	222	183
External static pressure	[mmH2O]	14.3	10.2	7.1	14.3	10.2	7.1	23.5	12.2	8.2	23.5	12.2	8.2
	[Pa]	140	100	70	140	100	70	230	120	80	230	120	80
Temperature recovery efficiency	[%]	78	78	80.5	-	-	-	78	78	81	-	-	-
Enthalpy recovery efficiency (%)	Heating	71	71	73	-	-	-	71	71	73.5	-	-	-
	Cooling	64.5	64.5	68	-	-	-	64.5	64.5	68.5	-	-	-
Noise (dB)	Measured at 1.5 m under the center of panel	33.5-34.5	32-33	30-31	34.5-35.5	33-34	30.5-31.5	35	31	29	36	32	29.5
	Air outlets	44.5-45.5	43-44	40-41	45.5-46.5	44-45	40.5-41.5	46	42	39	47	43	39.5
Starting current		Under 3.8/3.1 A or less											
Insulation resistance		10 MΩ or more (500 V megger)											
Dielectric strength		AC 1500 V 1 minute											

Model		LGH-100RX3-E,LGH-100RX3-E-60											
Control signal		Serial single communication (M-NET transmission)											
Heat recovery system		Air-to-air total heat (sensible heat + latent heat) recovery											
Heat recovery module material		Partition, spacing plate-special treated paper											
Cladding		Galvanized steel sheet											
Heat insulating material		Self-extinguishing urethane foam											
Motor		Totally enclosed capacitor permanent split-phase induction motor, 4 poles, 2 units											
Blower		245 mm dia.centrifugal fan											
Filter material		Non-woven fabrics filter (Gravitational method 82 %)											
Operating environment (Supply air)		-10 °C to 40 °C, RH 80 % or less (-15 °C (*1) to +40 °C, RH 80 % or less)											
Functions		Lossnay ventilation/Bypass ventilation High (Extra high)-Low switching											
Weight		72 kg											
Power supply		Single phase 220-240 V/50 Hz						Single phase 220 V/60 Hz					
Ventilation mode		Lossnay ventilation			Bypass ventilation			Lossnay ventilation			Bypass ventilation		
Fan speed		Extra high	High	Low	Extra high	High	Low	Extra high	High	Low	Extra high	High	Low
Current	[A]	2.3-2.3	2.3-2.3	2.2-2.2	2.3-2.3	2.3-2.2	2.1-2.1	2.8	2.6	1.7	2.8	2.6	1.7
Power consumption	[W]	500-525	495-515	465-475	505-525	500-515	455-485	600	555	365	595	550	365
Air volume	[m³/h]	1000	1000	870	1000	1000	870	1000	1000	720	1000	1000	720
	[L/s]	278	278	242	278	278	242	278	278	200	278	278	200
External static pressure	[mmH2O]	16.3	10.2	8.2	16.3	10.2	8.2	20.4	11.2	6.1	20.4	11.2	6.1
	[Pa]	160	100	80	160	100	80	200	110	60	200	110	60
Temperature recovery efficiency	[%]	79	79	81	-	-	-	79	79	83	-	-	-
Enthalpy recovery efficiency (%)	Heating	70	70	73	-	-	-	70	70	76	-	-	-
	Cooling	64.5	64.5	67	-	-	-	64.5	64.5	71	-	-	-
Noise (dB)	Measured at 1.5 m under the center of panel	36-37	34-35	31.5-32.5	37-38	35-36	33-34	36	34	30	37	35	31
	Air outlets	47-48	45-46	41.5-42.5	48-49	46-47	43-44	47	45	40	48	46	41
Starting current		Under 5.7/5.0 A or less											
Insulation resistance		10 MΩ or more (500 V megger)											
Dielectric strength		AC 1500 V 1 minute											

Model		LGH-150RX3-E											
Control signal		Serial single communication (M-NET transmission)											
Heat recovery system		Air-to-air total heat (sensible heat + latent heat) recovery											
Heat recovery module material		Partition, spacing plate-special treated paper											
Cladding		Galvanized steel sheet											
Heat insulating material		Self-extinguishing urethane foam											
Motor		Totally enclosed capacitor permanent split-phase induction motor, 4 poles, 4 units											
Blower		245 mm dia.centrifugal fan											
Filter material		Non-woven fabrics filter (Gravitational method 82 %)											
Operating environment (Supply air)		-10 °C to 40 °C, RH 80 % or less (-15 °C (*1) to +40 °C, RH 80 % or less)											
Functions		Lossnay ventilation/Bypass ventilation High (Extra high)-Low switching											
Weight		154 kg											
Power supply		Single phase 220-240 V/50 Hz						Single phase 220 V/60 Hz					
Ventilation mode		Lossnay ventilation			Bypass ventilation			Lossnay ventilation			Bypass ventilation		
Fan speed		Extra high	High	Low	Extra high	High	Low	Extra high	High	Low	Extra high	High	Low
Current	[A]	3.3-3.3	3.1-3.1	2.7-2.8	3.2-3.2	3.0-3.0	2.6-2.6	4.2	3.7	2.9	4.2	3.7	2.9
Power consumption	[W]	720-785	670-730	585-660	695-760	650-705	565-615	915	805	630	905	800	630
Air volume	[m³/h]	1500	1500	1200	1500	1500	1200	1500	1500	1200	1500	1500	1200
	[L/s]	417	417	333	417	417	333	417	417	333	417	417	333
External static pressure	[mmH2O]	14.0	10.2	5.1	14.0	10.2	5.1	21.0	12.0	7.0	21.0	12.0	7.0
	[Pa]	137	100	50	137	100	50	206	118	69	206	118	69
Temperature recovery efficiency	[%]	79	79	81	-	-	-	79	79	81	-	-	-
Enthalpy recovery efficiency (%)	Heating	72	72	75	-	-	-	72	72	75	-	-	-
	Cooling	65.5	65.5	69	-	-	-	65.5	65.5	69	-	-	-
Noise (dB)	Measured at 1.5 m under the center of panel	36.5-37.5	35.5-36.5	32.5-33.5	36.5-37.5	35.5-36.5	32.5-33.5	37	36	33	37	36	33
	Air outlets	47.5-48.5	46.5-47.5	43.5-44.5	47.5-48.5	46.5-47.5	43.5-44.5	48	47	44	48	47	44
Starting current		Under 6.8/5.9 A or less											
Insulation resistance		10 MΩ or more (500 V megger)											
Dielectric strength		AC 1500 V 1 minute											

Model		LGH-200RX3-E,LGH-200RX3-E-60											
Control signal		Serial single communication (M-NET transmission)											
Heat recovery system		Air-to-air total heat (sensible heat + latent heat) recovery											
Heat recovery module material		Partition, spacing plate-special treated paper											
Cladding		Galvanized steel sheet											
Heat insulating material		Self-extinguishing urethane foam											
Motor		Totally enclosed capacitor permanent split-phase induction motor, 4 poles, 4 units											
Blower		245 mm dia.centrifugal fan											
Filter material		Non-woven fabrics filter (Gravitational method 82 %)											
Operating environment (Supply air)		-10 °C to 40 °C, RH 80 % or less (-15 °C (*1) to +40 °C, RH 80 % or less)											
Functions		Lossnay ventilation/Bypass ventilation High (Extra high)-Low switching											
Weight		179 kg											
Power supply		Single phase 220-240 V/50 Hz						Single phase 220 V/60 Hz					
Ventilation mode		Lossnay ventilation			Bypass ventilation			Lossnay ventilation			Bypass ventilation		
Fan speed		Extra high	High	Low	Extra high	High	Low	Extra high	High	Low	Extra high	High	Low
Current	[A]	4.6-4.3	4.6-4.3	4.1-3.8	4.4-4.2	4.4-4.1	4.1-3.8	5.4	5.2	3.3	5.3	5.0	3.3
Power consumption	[W]	1000-1020	995-1020	900-905	960-995	955-975	885-900	1175	1130	735	1155	1090	720
Air volume	[m³/h]	2000	2000	1400	2000	2000	1400	2000	2000	1400	2000	2000	1400
	[L/s]	556	556	389	556	556	389	556	556	389	556	556	389
External static pressure	[mmH2O]	14.0	8.2	8.5	14.0	8.2	8.5	20.0	9.0	7.0	20.0	9.0	7.0
	[Pa]	137	80	83	137	80	83	196	88	69	196	88	69
Temperature recovery efficiency	[%]	79	79	83	-	-	-	79	79	83	-	-	-
Enthalpy recovery efficiency (%)	Heating	70	70	76	-	-	-	70	70	76	-	-	-
	Cooling	64.5	64.5	71	-	-	-	64.5	64.5	71	-	-	-
Noise (dB)	Measured at 1.5 m under the center of panel	39-40	37-38	35.5-36.5	39.5-40.5	37.5-38.5	36-37	38.5	36.5	34.5	38.5	36.5	34.5
	Air outlets	50-51	48-49	46.5-47.5	50.5-51.5	48.5-49.5	47-48	49.5	47.5	45.5	49.5	47.5	45.5
Starting current		Under 13.0/9.7 A or less											
Insulation resistance		10 MΩ or more (500 V megger)											
Dielectric strength		AC 1500 V 1 minute											

2. Dimensions

LGH-15RX3-E

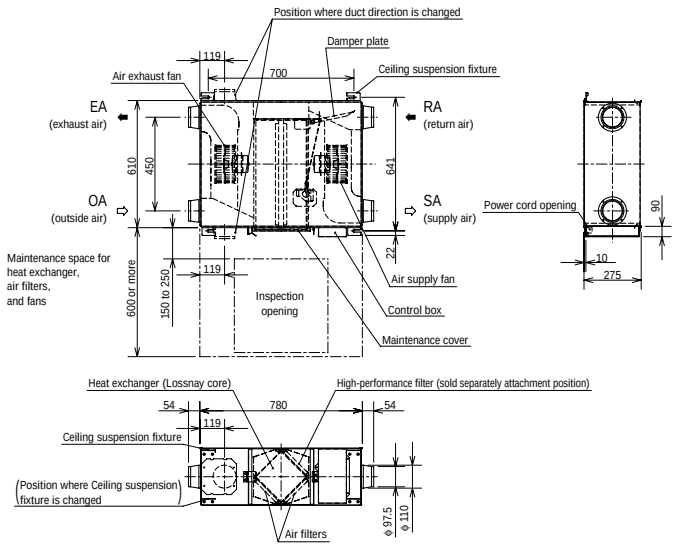

Unit (mm)

* Attention

1. If condensation is expected to form, heat up the fresh outside air using a duct heater, etc.
2. An inspection port (450 × 450 – 600 × 600 mm) must be installed on the filter and Lossnay core removing side.
3. The two outdoor ducts must be covered with heat-insulating material in order to prevent condensation from forming. The two indoor ducts may be covered with heat-insulation if Lossnay is to be installed in the circumstance of higher temperature in summer.
4. Installing the duct damper is preferred also to prevent the outdoor air introduced to room if there has strongthern wind, when the unit operates or stops.
5. The outside ducts must be tilted at a gradient (1/30 or more) down toward the outdoor area from Lossnay unit.

* Specifications subject to change without notice.

LGH-25RX3-E

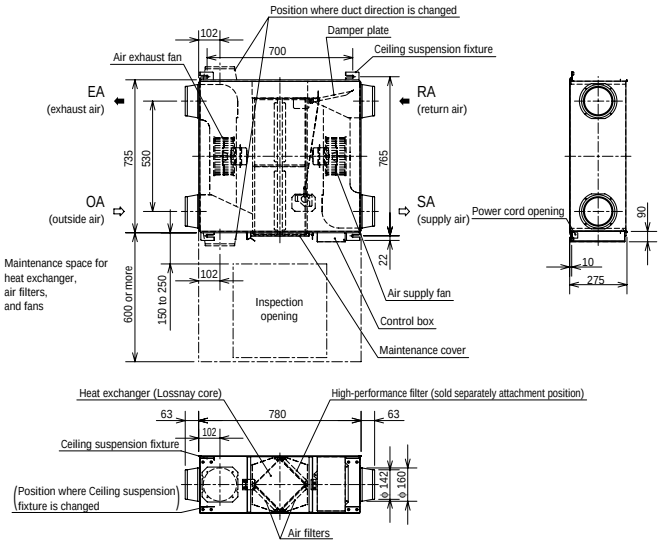

Unit (mm)

* Attention

1. If condensation is expected to form, heat up the fresh outside air using a duct heater, etc.
2. An inspection port (450 × 450 – 600 × 600 mm) must be installed on the filter and Lossnay core removing side.
3. The two outdoor ducts must be covered with heat-insulating material in order to prevent condensation from forming. The two indoor ducts may be covered with heat-insulation if Lossnay is to be installed in the circumstance of higher temperature in summer.
4. Installing the duct damper is preferred also to prevent the outdoor air introduced to room if there has strongthern wind, when the unit operates or stops.
5. The outside ducts must be tilted at a gradient (1/30 or more) down toward the outdoor area from Lossnay unit.

* Specifications subject to change without notice.

LGH-35RX3-E

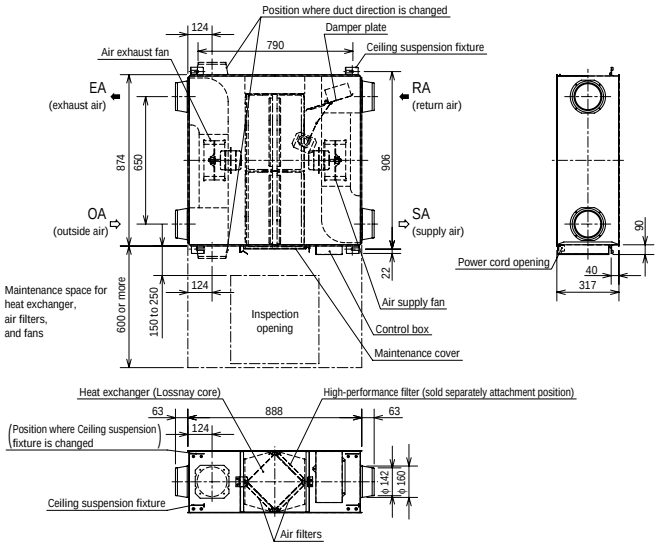

Unit (mm)

* Attention

1. If condensation is expected to form, heat up the fresh outside air using a duct heater, etc.
2. An inspection port (450 × 450 – 600 × 600 mm) must be installed on the filter and Lossnay core removing side.
3. The two outdoor ducts must be covered with heat-insulating material in order to prevent condensation from forming. The two indoor ducts may be covered with heat-insulation if Lossnay is to be installed in the circumstance of higher temperature in summer.
4. Installing the duct damper is preferred also to prevent the outdoor air introduced to room if there has strongthern wind, when the unit operates or stops.
5. The outside ducts must be tilted at a gradient (1/30 or more) down toward the outdoor area from Lossnay unit.

* Specifications subject to change without notice.

LGH-50RX3-E

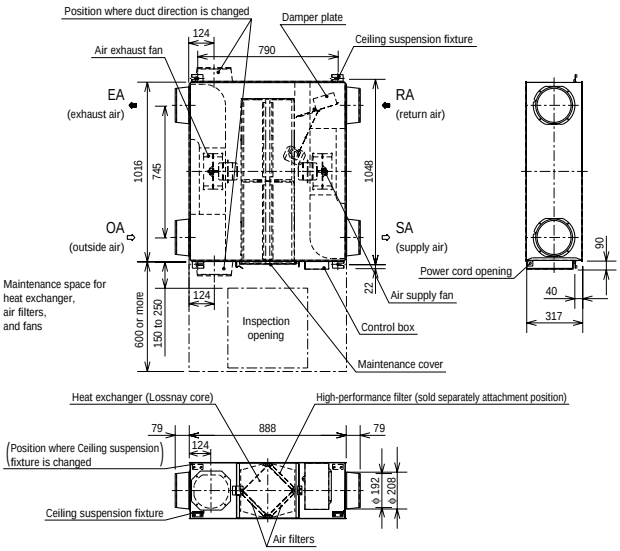

Unit (mm)

* Attention

1. If condensation is expected to form, heat up the fresh outside air using a duct heater, etc.
2. An inspection port (450 × 450 – 600 × 600 mm) must be installed on the filter and Lossnay core removing side.
3. The two outdoor ducts must be covered with heat-insulating material in order to prevent condensation from forming. The two indoor ducts may be covered with heat-insulation if Lossnay is to be installed in the circumstance of higher temperature in summer.
4. Installing the duct damper is preferred also to prevent the outdoor air introduced to room if there has strongthern wind, when the unit operates or stops.
5. The outside ducts must be tilted at a gradient (1/30 or more) down toward the outdoor area from Lossnay unit.

* Specifications subject to change without notice.

LGH-80RX3-E

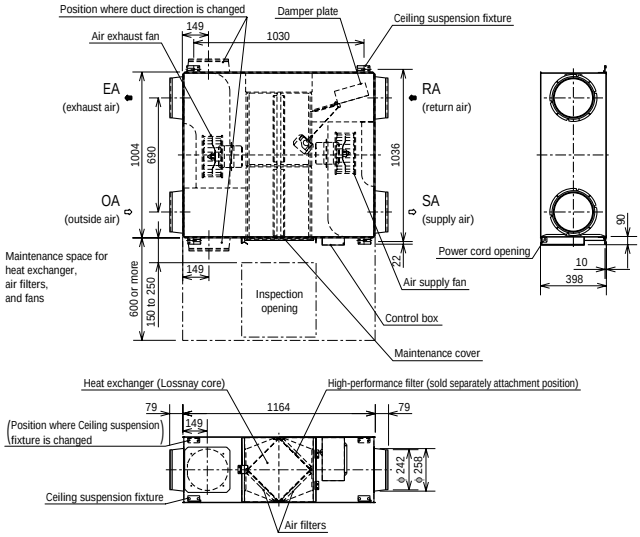

Unit (mm)

* Attention

1. If condensation is expected to form, heat up the fresh outside air using a duct heater, etc.
2. An inspection port (450 × 450 – 600 × 600 mm) must be installed on the filter and Lossnay core removing side.
3. The two outdoor ducts must be covered with heat-insulating material in order to prevent condensation from forming. The two indoor ducts may be covered with heat-insulation if Lossnay is to be installed in the circumstance of higher temperature in summer.
4. Installing the duct damper is preferred also to prevent the outdoor air introduced to room if there has strongthern wind, when the unit operates or stops.
5. The outside ducts must be tilted at a gradient (1/30 or more) down toward the outdoor area from Lossnay unit.

* Specifications subject to change without notice.

LGH-100RX3-E,LGH-100RX3-E-60

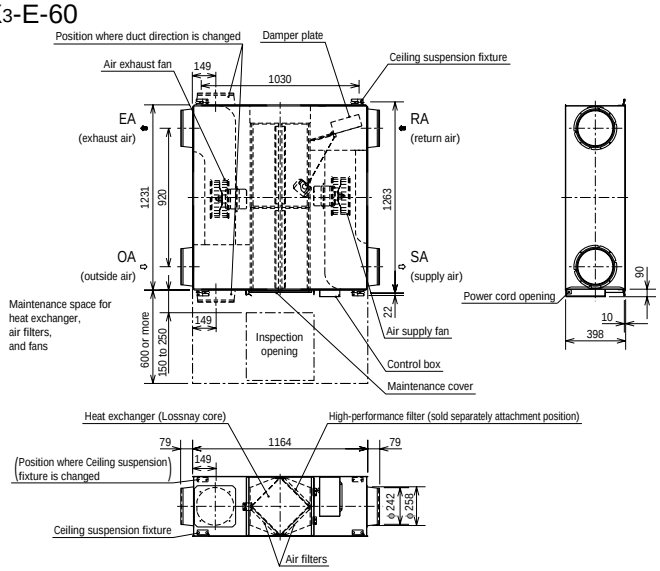

Unit (mm)

* Attention

1. If condensation is expected to form, heat up the fresh outside air using a duct heater, etc.
2. An inspection port (450 × 450 – 600 × 600 mm) must be installed on the filter and Lossnay core removing side.
3. The two outdoor ducts must be covered with heat-insulating material in order to prevent condensation from forming. The two indoor ducts may be covered with heat-insulation if Lossnay is to be installed in the circumstance of higher temperature in summer.
4. Installing the duct damper is preferred also to prevent the outdoor air introduced to room if there has strongthern wind, when the unit operates or stops.
5. The outside ducts must be tilted at a gradient (1/30 or more) down toward the outdoor area from Lossnay unit.

* Specifications subject to change without notice.

LGH-150RX3-E

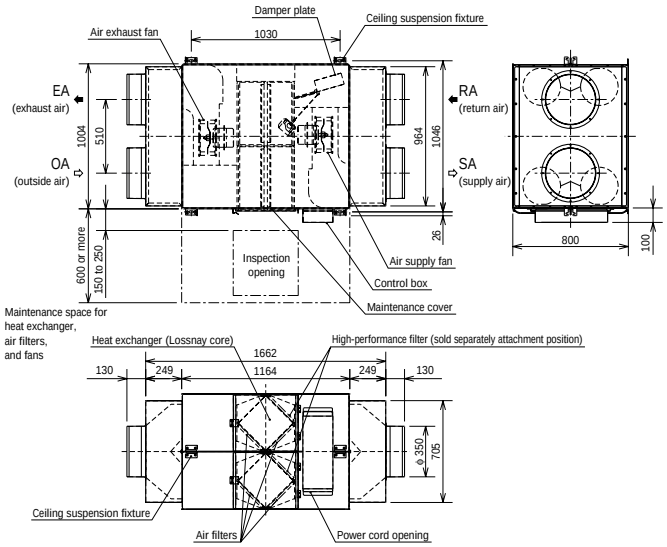

Unit (mm)

* Attention

1. If condensation is expected to form, heat up the fresh outside air using a duct heater, etc.
2. An inspection port (450 × 450 – 600 × 600 mm) must be installed on the filter and Lossnay core removing side.
3. The two outdoor ducts must be covered with heat-insulating material in order to prevent condensation from forming. The two indoor ducts may be covered with heat-insulation if Lossnay is to be installed in the circumstance of higher temperature in summer.
4. Installing the duct damper is preferred also to prevent the outdoor air introduced to room if there has strongthern wind, when the unit operates or stops.
5. The outside ducts must be tilted at a gradient (1/30 or more) down toward the outdoor area from Lossnay unit.

* Specifications subject to change without notice.

LGH-200RX3-E,LGH-200RX3-E-60

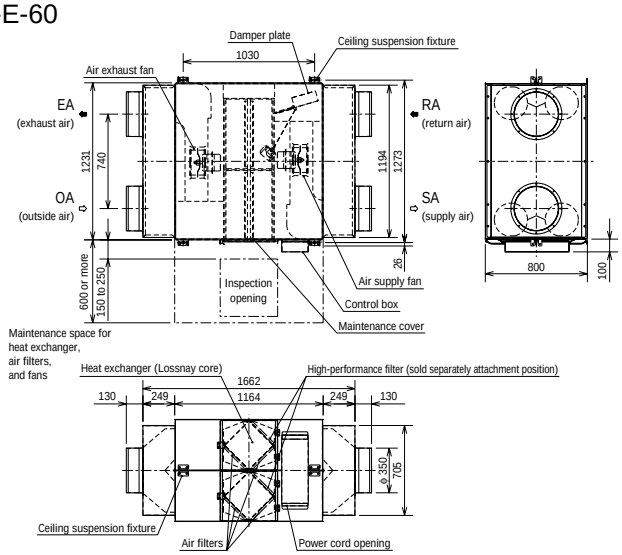

Unit (mm)

* Attention

1. If condensation is expected to form, heat up the fresh outside air using a duct heater, etc.
2. An inspection port (450 × 450 – 600 × 600 mm) must be installed on the filter and Lossnay core removing side.
3. The two outdoor ducts must be covered with heat-insulating material in order to prevent condensation from forming. The two indoor ducts may be covered with heat-insulation if Lossnay is to be installed in the circumstance of higher temperature in summer.
4. Installing the duct damper is preferred also to prevent the outdoor air introduced to room if there has strongthern wind, when the unit operates or stops.
5. The outside ducts must be tilted at a gradient (1/30 or more) down toward the outdoor area from Lossnay unit.

* Specifications subject to change without notice.

3. Wiring diagrams

LGH-15RX3-E,LGH-25RX3-E,LGH-35RX3-E,LGH-50RX3-E,LGH-80RX3-E,LGH-100RX3-E,LGH-100RX3-E-60

■ NOTE

1. TM1, TM2, TM3, TB5 shown in bold lines are field work.
2. Breaker should be provided by the customer.
3. Be sure to connect the grounding wire.

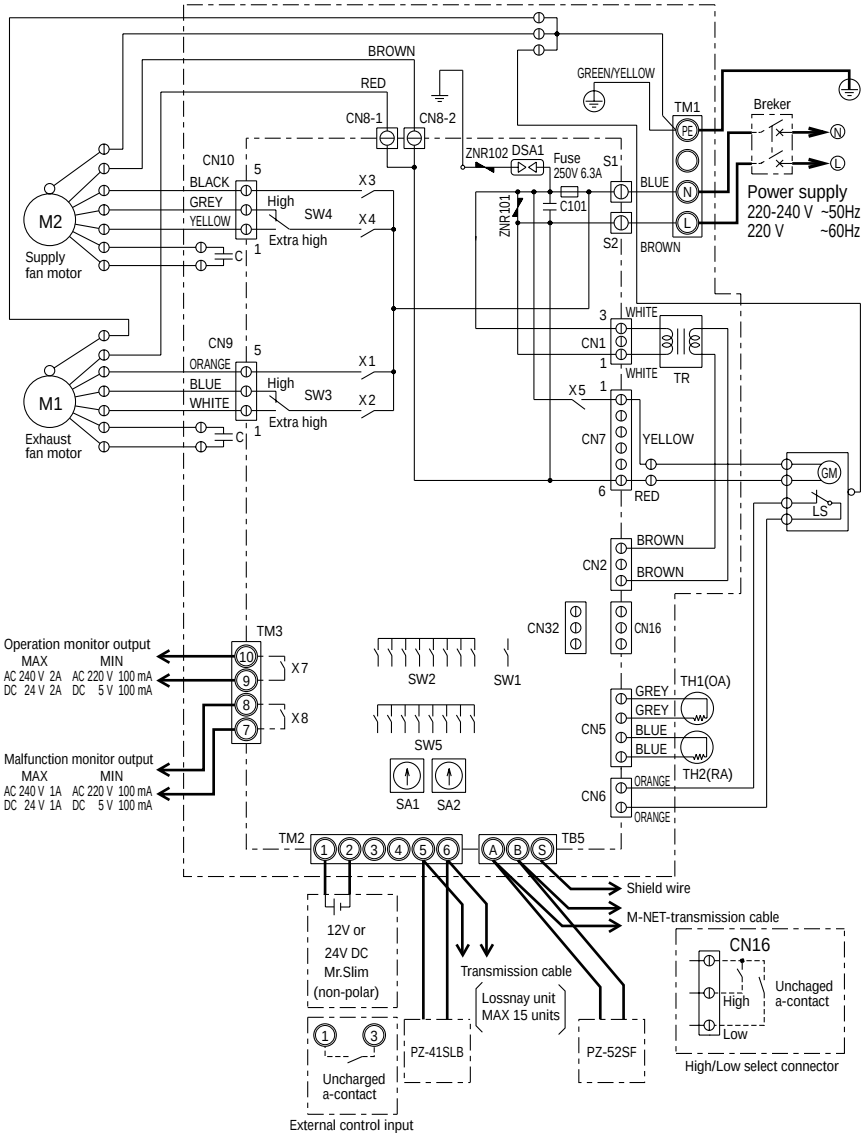

■ Symbol explanation

M1 : Motor for exhaust fan
M2 : Motor for supply fan
C : Capacitor
GM : Motor for Bypass movement
LS : Microswitch
TH1 : Thermistor for outside air
TH2 : Thermistor for return air
SW1 : Switch (Main/Sub change)
SW2, 5: Switch (Function selection)
SW3 : High/E.high select switch (Exhaust fan)
SW4 : High/E.high select switch (Supply fan)
TM1 : Terminal block (Power supply)
TM2 : Terminal block (Transmission cable and external control input)
TM3 : Terminal block (Monitor output)
*1 TB5 : Terminal block (M-NET Transmission cable)
S1, S2 : Connector (Power supply)
TR : Control circuit transformer
X7 : Relay contact (For operation monitor output)
X8 : Relay contact (For malfunction monitor output)
CN1 : Connector (Transformer primary)
CN2 : Connector (Transformer secondary)
CN5 : Connector (Thermistor)
CN6 : Connector (Microswitch)
CN7 : Connector (Motor for Bypass operation)
CN8-1 : Tab connector (Fan motor)
CN8-2 : Tab connector (Fan motor)
CN9 : Connector (Fan motor)
CN10 : Connector (Fan motor)
CN16 : Connector (High/Low switch)
CN32 : Connector (Remote control selection)

*1 SA1 : Address setting rotary switch (10 digit)
*1 SA2 : Address setting rotary switch (1 digit)

MARK
◎ : Indicates terminal block
⦶ : Connector
⊡ : Board insertion connector or fastening connector of control board

* Attention

1. This must be used with Mitsubishi Electric Air-Conditioner Network System. (MELANS)
2. External control input (TM2) is impossible to use on the Lossnay addressed to “Sub” (SW1) unit.
3. PZ-41SLB and PZ-52SF cannot be used simultaneously.

* Specifications subject to change without notice.

LGH-150RX3-E,LGH-200RX3-E,LGH-200RX3-E-60

■ NOTE

1. TM1, TM2, TM3, TB5 shown in bold lines are field work.
2. Breaker should be provided by the customer.
3. Be sure to connect the grounding wire.

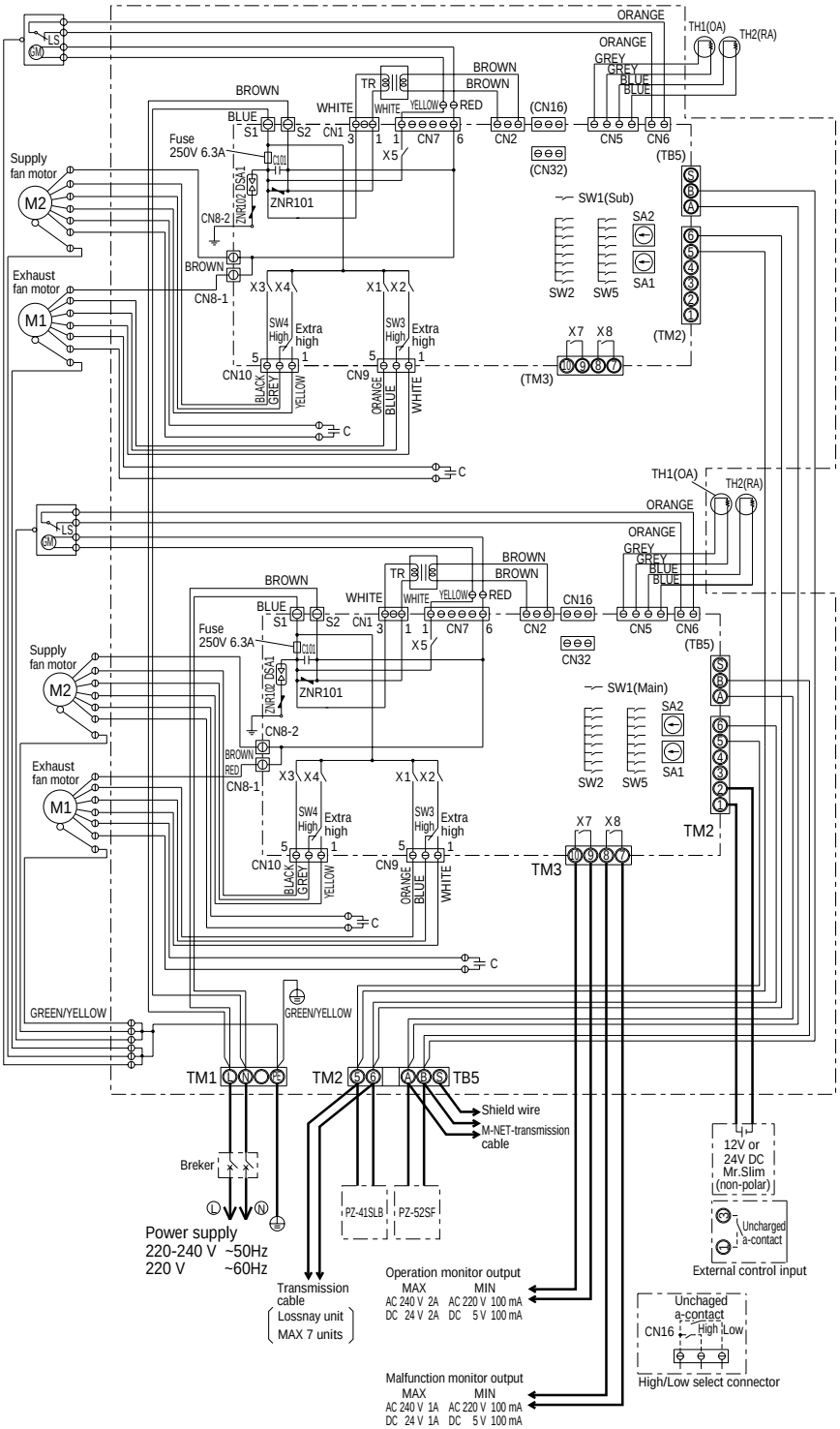

■ Symbol explanation

M1 : Motor for exhaust fan
M2 : Motor for supply fan
C : Capacitor
GM : Motor for Bypass movement
LS : Microswitch
TH1 : Thermistor for outside air
TH2 : Thermistor for return air
SW1 : Switch (Main/Sub change)
SW2, 5: Switch (Function selection)
SW3 : High/E.high select switch (Exhaust fan)
SW4 : High/E.high select switch (Supply fan)
TM1 : Terminal block (Power supply)
TM2 : Terminal block (Transmission cable and external control input)
TM3 : Terminal block (Monitor output)
*1 TB5 : Terminal block (M-NET Transmission cable)
S1, S2 : Connector (Power supply)
TR : Control circuit transformer
X7 : Relay contact (For operation monitor output)
X8 : Relay contact (For malfunction monitor output)
CN1 : Connector (Transformer primary)
CN2 : Connector (Transformer secondary)
CN5 : Connector (Thermistor)
CN6 : Connector (Microswitch)
CN7 : Connector (Motor for Bypass operation)
CN8-1 : Tab connector (Fan motor)
CN8-2 : Tab connector (Fan motor)
CN9 : Connector (Fan motor)
CN10 : Connector (Fan motor)
CN16 : Connector (High/Low switch)
CN32 : Connector (Remote control selection)

*1 SA1 : Address setting rotary switch (10 digit)
*1 SA2 : Address setting rotary switch (1 digit)

MARK
◎ : Indicates terminal block
⦶ : Connector
⦶ : Board insertion connector or fastening connector of control board

* Attention

1. This must be used with Mitsubishi Electric Air-Conditioner Network System. (MELANS)
2. External control input (TM2) is impossible to use on the Lossnay addressed to “Sub” (SW1) unit.
3. PZ-41SLB and PZ-52SF cannot be used simultaneously.

* Specifications subject to change without notice.

4. Maintenance procedures

4-1 Blower Parts

①Remove the cover fixing screw.
②Pull back the hinged clip.
Open the door and lift off of the hinge brackets.

LGH-15RX3-E~LGH-100RX3-E type

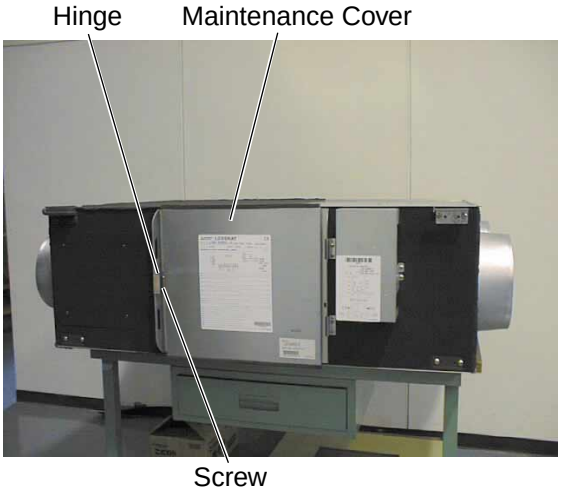

LGH-150RX3-E,LGH-200RX3-E type

③Remove Filters from the unit.
④Remove Cores from the unit.

LGH-15RX3-E~LGH-100RX3-E type

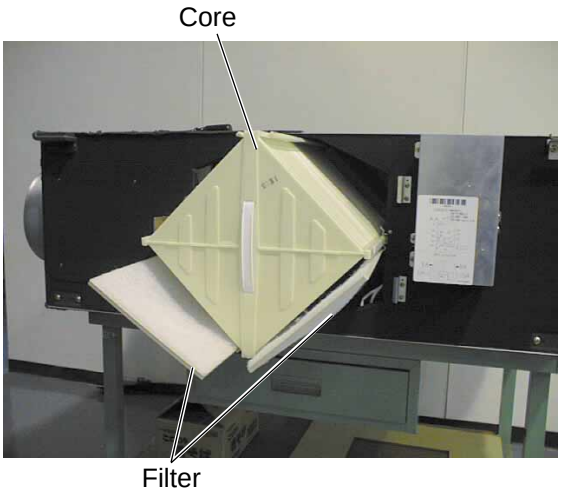

LGH-150RX3-E,LGH-200RX3-E type

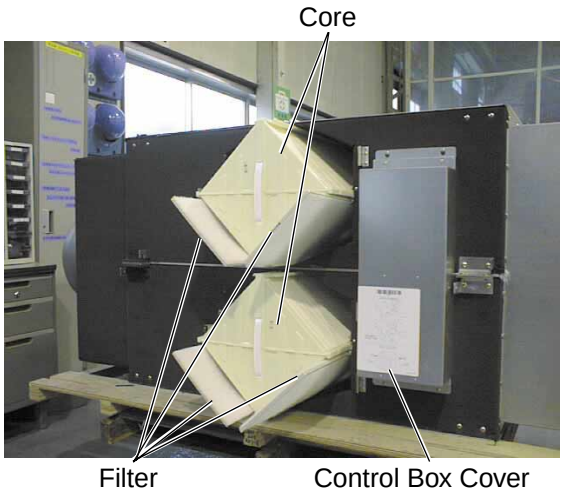

⑤Remove screw from the core-guide,Remove core-guide.

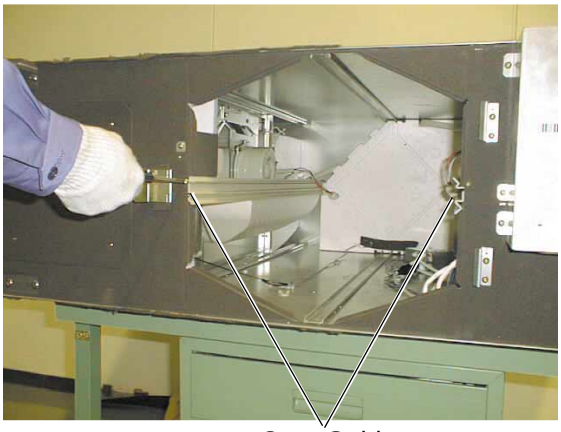

Core Guide

⑥Remove separator from the blower portion.

Separator

⑦Remove screws from the motor base.

Motor Base Motor

⑧Remove the pre-assembled blower.

Pre-assembled Blower

4-2 Damper Movement Motor Part (All units available)

①Remove (2) screws out from the damper motor cover.

Damper Motor Cover

②Take the damper movement motor out of the cover.

Damper Movement Motor

4-3 Circuit Board Part

(1)LGH-15RX3-E~LGH-100RX3-E type

①Remove (3) screws from the control box cover.

Control Box Cover

②Remove (2) screws from capacitors.

③Remove all harnesses connected to the circuit board.

④Take the circuit board out.

(2)LGH-150RX3-E,LGH-200RX3-E (-60) type

①Remove (4) screws from the control box cover.

②Remove all harnesses connected to the circuit board.

③Take the circuit board out.

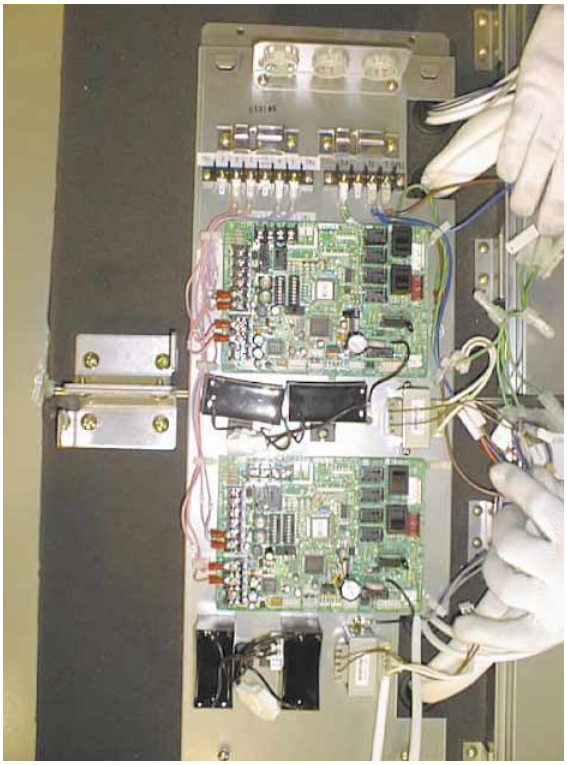

CAUTION

- Unit : LGH-150RX3-E,LGH-200RX3-E
- All settings should be re-set the same as previous.

a.Main/Sub change switch (SW1)
Upper PCB : Main
Lower PCB : Sub

b.Address switch (SA1,SA2)

c.Function switch (SW2,SW5)

d.Fan speed selection switch (SW3,SW4)

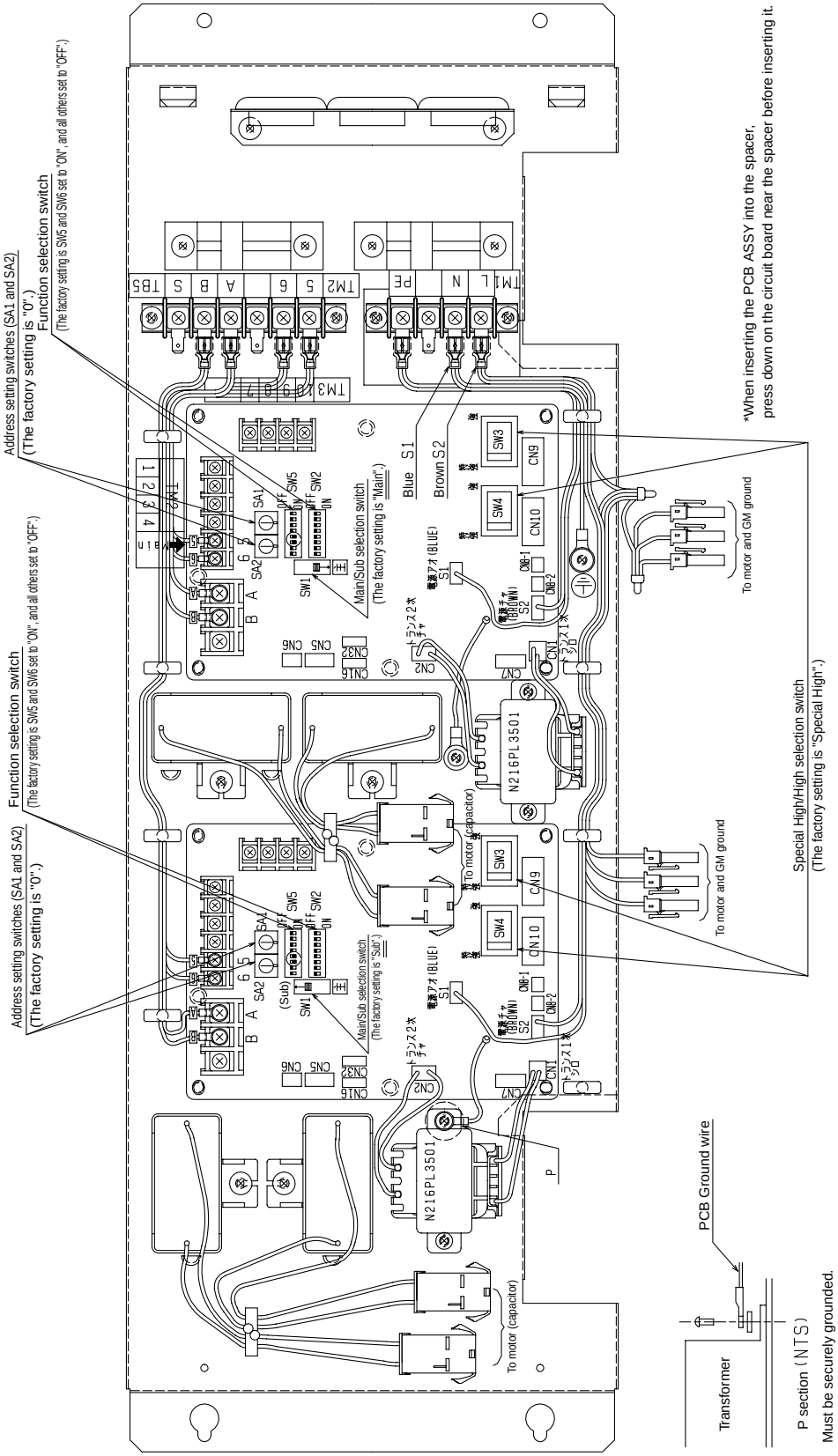

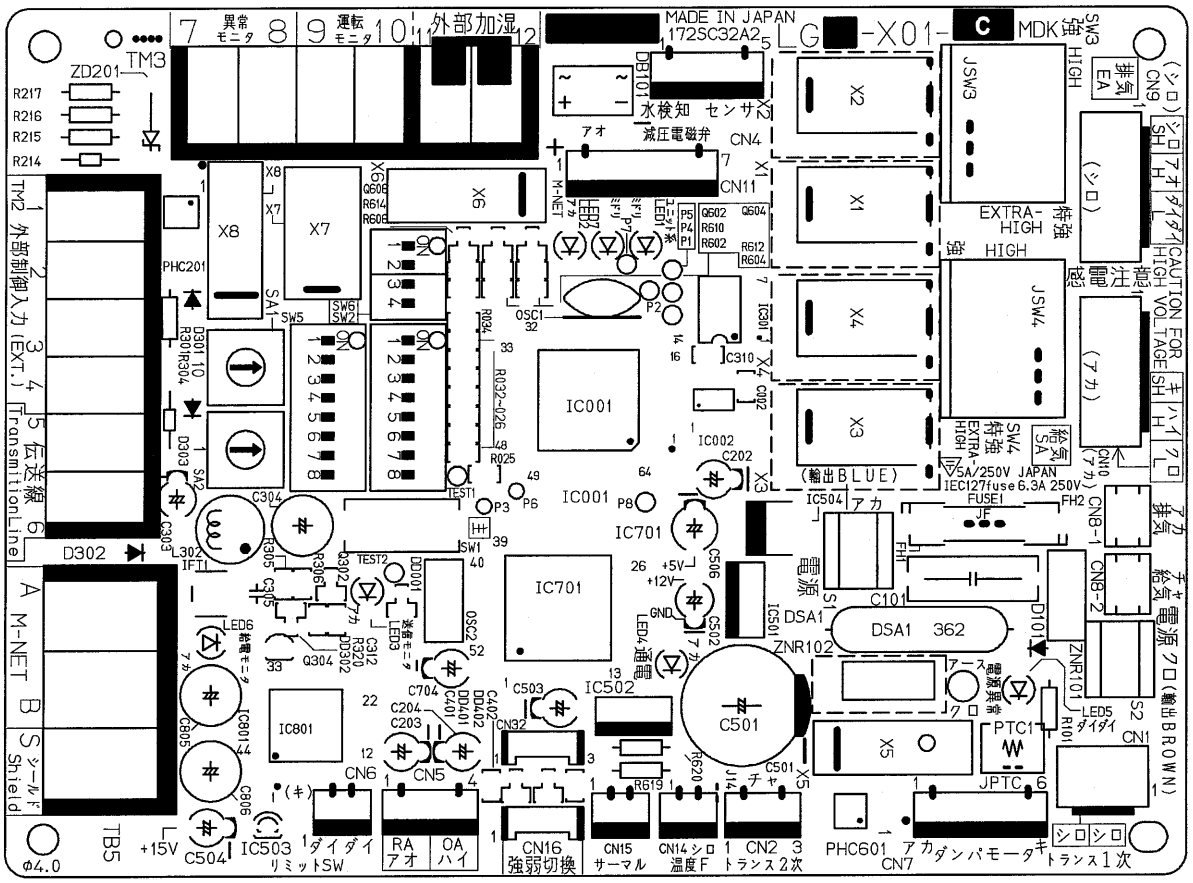

LG-X01

部品面シルク

1999.12.17 2000.04.03
2000.02.24 2000.04.03

5. Parts list

Please note the following when using the parts list.

1. To order parts, contact the nearest office of MITSUBISHI ELECTRIC Corporation.
2. When ordering parts, always indicate the part number, part name, and number of parts required.
3. Parts are not always available, and it may take time for you to receive them.
4. There may be specification improvements or prices changes.
5. Specifications and prices are as of January 2002.
6. Parts marked ⚠ are critical for safety. To maintain safety and performance, always replace these parts with the parts prescribed.
7. The numbers that are circled in the exploded view are the same as the reference number for the part being indicated.

Description of screw abbreviations

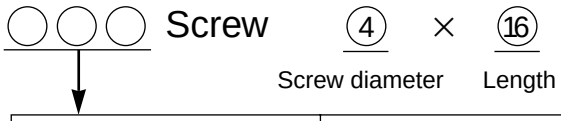

Abbreviation	Description
PC screw	Cross recess flat head machine screw
PRC screw	Cross recess oval head machine screw
PP screw	Cross recess pan head machine screw
SW · PP screw	Cross recess pan head screw with spring washer
PPT screw	Cross recess tapping screw
PCT screw	Cross recess flat head tapping screw
PTT screw	Cross recess truss head tapping screw
PT screw	Cross recess truss head machine screw
SET screw	Slotted head stop screw
SQ · SET screw	Square head stop screw
P · SET screw	Pan head stop screw
PMT screw	Primer truss head screw
HS · SET screw	Hexagon head stop screw
P · R · W screw	Cross recess round wood screw
P · C · W screw	Cross recess flat head wood screw
P · R · C · W screw	Cross recess round and flat wood screw
R · W screw	Slotted round wood screw
PW · PP screw	Cross recess pan head screw with small washer
SW-PW · PP screw	Cross recess pan head machine screw with spring washer and flat washer

Model LGH-15RX3-E

No.	Parts No.	Name of part	Q'ty pcs/unit	Critical for safety	Remarks	Price
1.	H00 312 007	P T T screw 4×6	22			
2.	R50 384 617	Pipe guide	4			
3.	H00 000 487	P T T screw 4×8	18			
4.	R50 091 380	Hanger	4			
5.	H00 000 391	P T screw 5×8	8			
6.	R50 395 707	Maintenance cover	1			
7.	R50 395 381	Core guide	1			
8.	Y50 061 717	Filter	2	⚠		
9.	R50 213 710	Lossnay core	1	⚠		
10.	R50 261 381	Core guide	1			
11.	R50 354 704	Cover	2			
12.	R50 213 344	Hinge	1			
13.	M34 074 017	Special screw 4×11	1			
14.	Y50 029 712	Fix plate	1			
15.	Y50 061 704	Hanger	4			
16.	R50 361 717	Sound absorbing material	1			

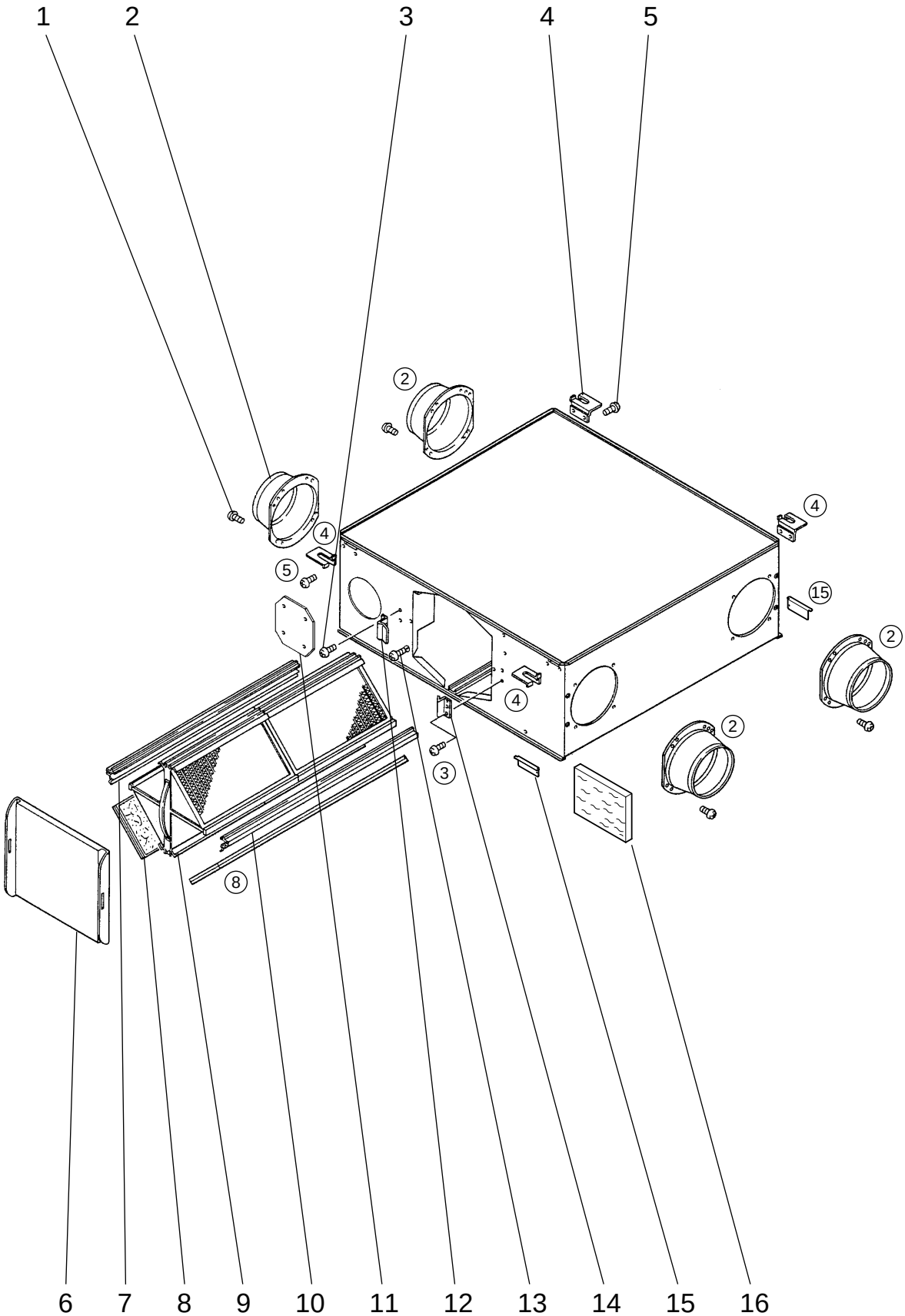
1
2
3
4
5
2
4
4
5
15
2
4
2
3
8
6
7
8
9
10
11
12
13
14
15
16

Model LGH-15RX3-E

No.	Parts No.	Name of part	Q'ty pcs/unit	Critical for safety	Remarks	Price
21.	R50 331 067	Special nut	2			
22.	M34 398 077	Tab washer	2			
23.	R50 354 480	Centrifugal fan	2	⚠	ϕ 180	
24.	R50 028 465	Special washer	2			
25.	Y50 061 451	Motor	2	⚠		
26.	R50 214 708	Motor fix plate	4			
27.	H00 000 332	P T T screw 4×10	17			
28.	Y50 029 708	Motor base	2			

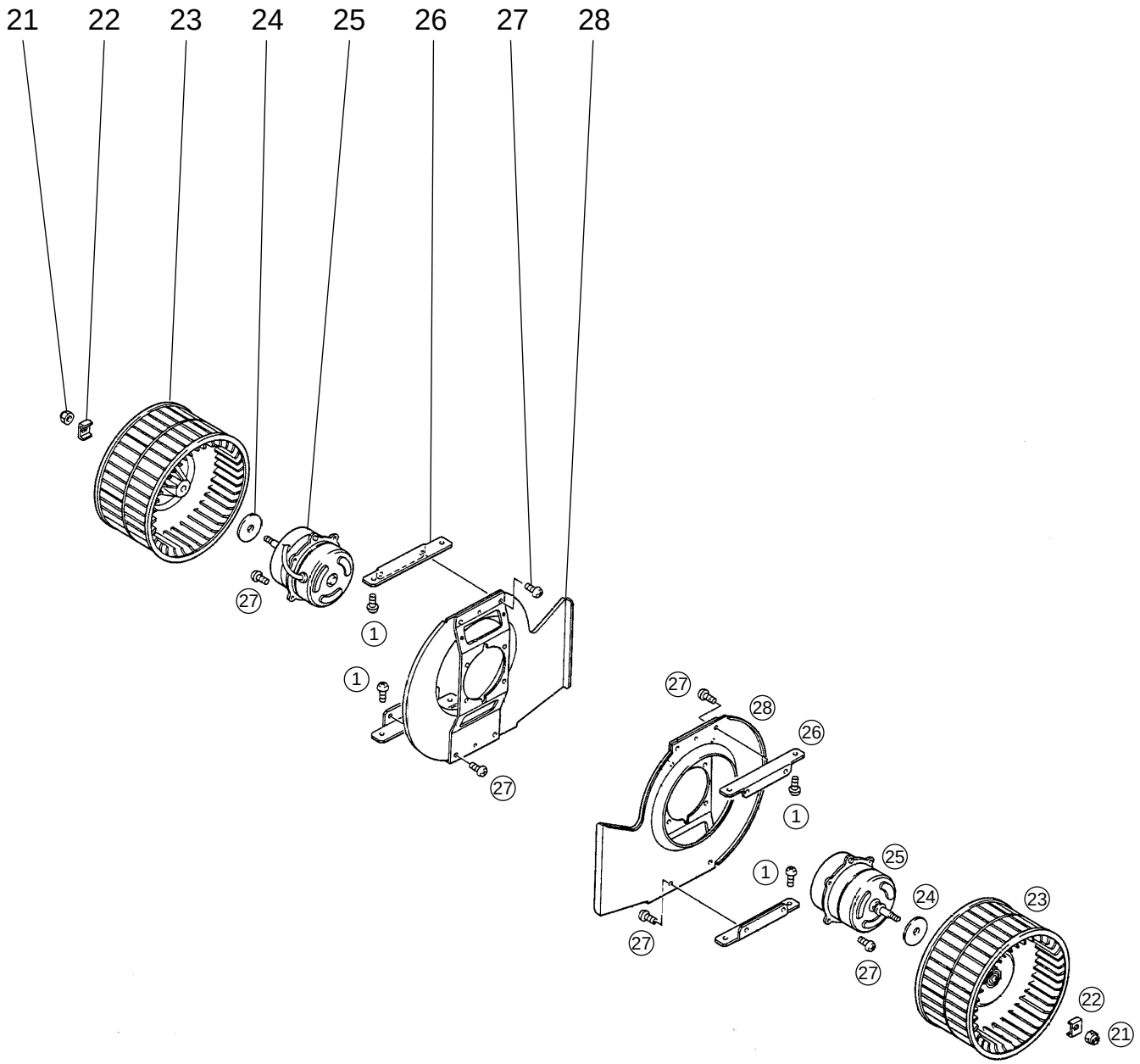
21
22
23
24
25
26
27
28
27
1
1
27
27
28
26
1
1
25
24
23
27
27
22
21

Model LGH-15RX3-E

No.	Parts No.	Name of part	Q'ty pcs/unit	Critical for safety	Remarks	Price
31.	Y50 061 693	Damper motor cover	1			
32.	R50 213 715	Damper support	1			
33.	M31 234 089	Special bush	2			
34.	R50 095 156	Pull spring	1			
35.	R50 213 713	Damper	1			
36.	Y50 061 260	Damper motor	1	⚠	220-240V	
37.	R50 054 225	Bush	2			
38.	R50 228 150	Rod	1			
39.	R50 399 224	Cord clip	3			
40.	Y50 061 215	Thermistor	1	⚠	-30/100° C	
41.	R50 399 223	Cord clip	2			
42.	Y50 061 706	Cover plate	1			
43.	K83 170 228	Cord band	1			
44.	M45 017 228	Cord band	1			
45.	Y50 047 216	Transformer	1	⚠	230WAC	
46.	R50 385 283	Capacitor	2	⚠	2.5μF·440WAC	
47.	H00 011 008	P T screw 4×8(BS)	1		For earth	
48.	H00 013 076	Lock washer	2			
49.	H00 000 488	P T T screw 4×12	2			
50.	R50 072 236	Terminal	1	⚠	4P	
51.	Y50 061 226	Insulation plate	1			
52.	Y50 061 708	PCB fixplate	1			
53.	H00 000 003	P P screw 4×8	2			
54.	Y50 061 171	PCB assy	1	⚠	LG-X01-E	
55.	X40 139 095	Spacer	4			
56.	D42 019 095	Spacer	3			
57.	M35 164 224	Cord clip	1			
58.	Y50 047 226	Cord bush	2			
59.	K83 223 225	Bush	1			

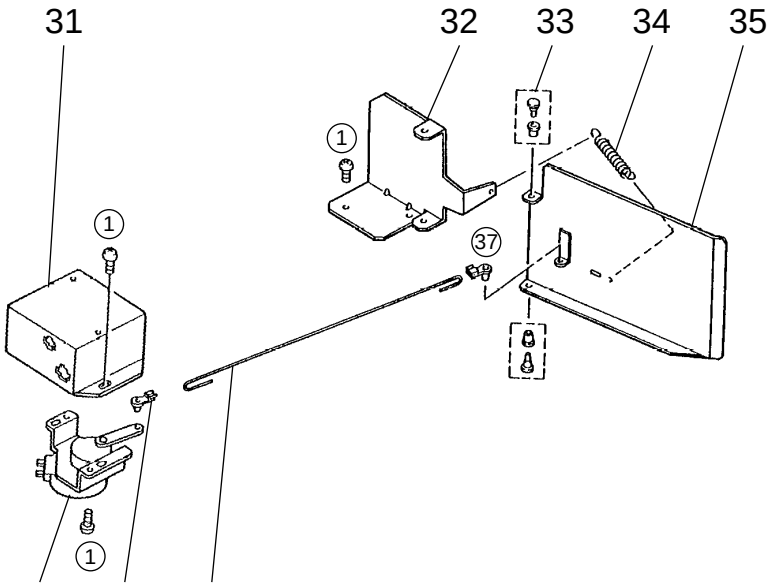
31
32
33
34
35
1
1
37
1
36
37
38

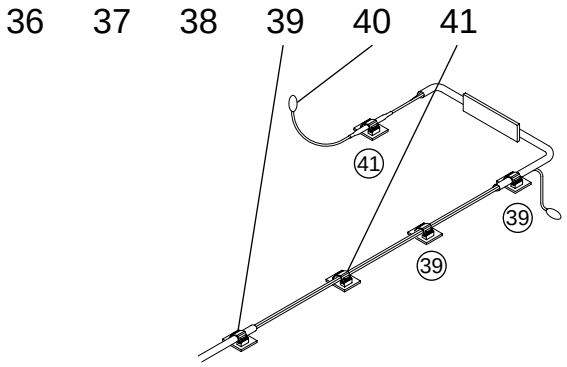
39
40
41
41
39
39

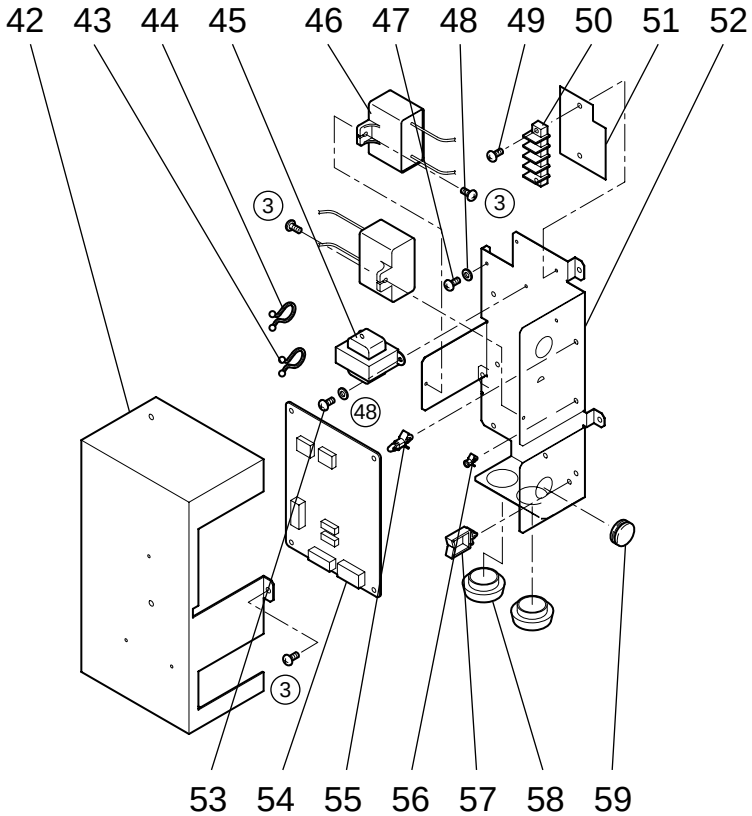
42
43
44
45
46
47
48
49
50
51
52
3
3
48
3
53
54
55
56
57
58
59

Model LGH-25RX3-E

No.	Parts No.	Name of part	Q'ty pcs/unit	Critical for safety	Remarks	Price
1.	H00 312 007	P T T screw 4×6	22			
2.	R50 323 609	Pipe guide	4			
3.	H00 000 487	P T T screw 4×8	18			
4.	R50 091 380	Hanger	4			
5.	H00 000 391	P T screw 5×8	8			
6.	R50 395 707	Maintenance cover	1			
7.	R50 395 382	Core guide	1			
8.	Y50 061 718	Filter	2	⚠		
9.	R50 214 710	Lossnay core	2	⚠		
10.	R50 395 383	Core guide	1			
11.	R50 354 704	Cover	2			
12.	R50 213 344	Hinge	1			
13.	M34 074 017	Special screw 4×11	1			
14.	Y50 029 712	Fix plate	1			
15.	Y50 061 704	Hanger	4			
16.	R50 354 718	Sound absorbing material	1			

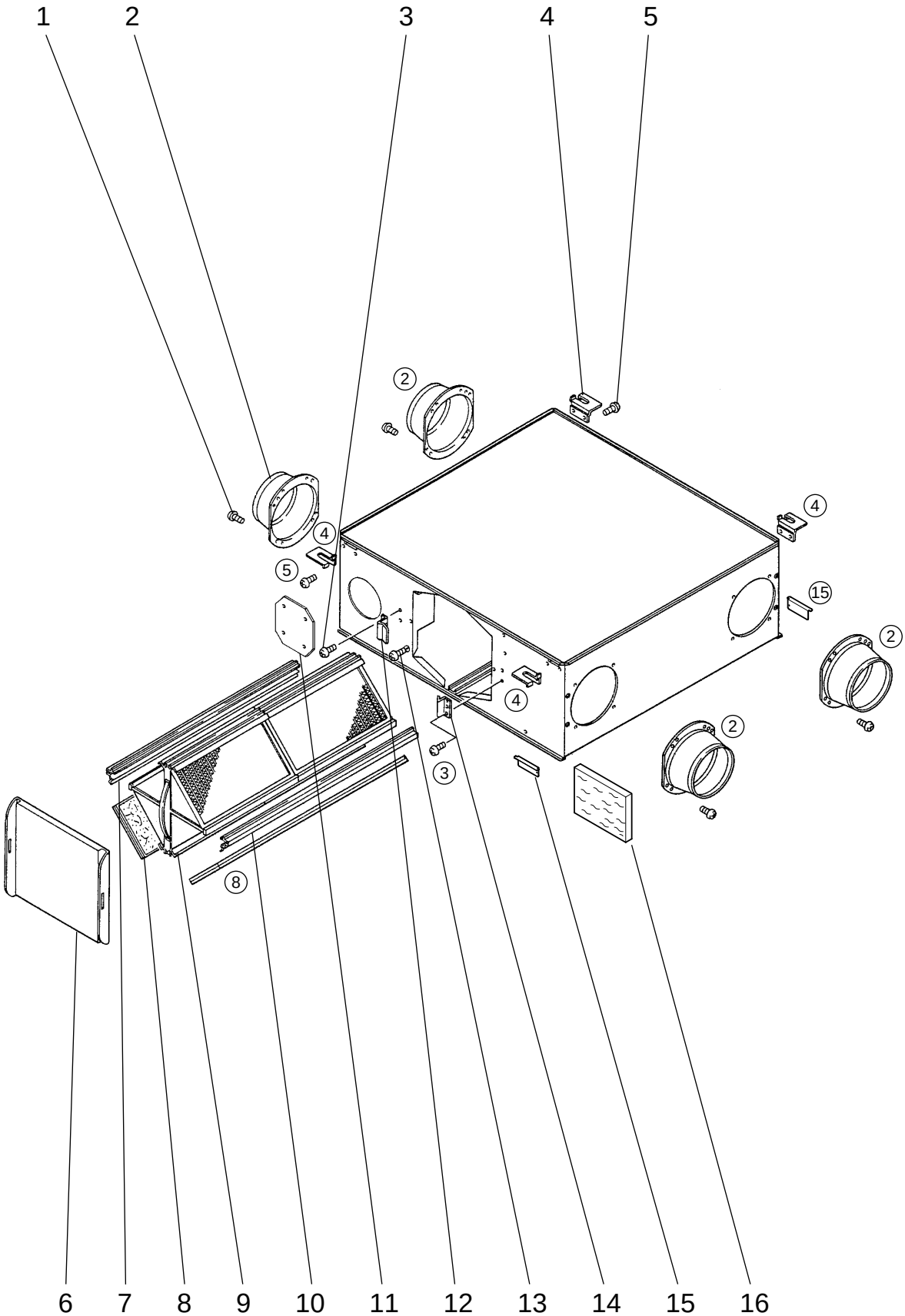
1
2
3
4
5
2
4
4
5
15
2
4
2
3
8
6
7
8
9
10
11
12
13
14
15
16

Model LGH-25RX3-E

No.	Parts No.	Name of part	Q'ty pcs/unit	Critical for safety	Remarks	Price
21.	R50 331 067	Special nut	2			
22.	M34 398 077	Tab washer	2			
23.	R50 354 480	Centrifugal fan	2	⚠	ϕ 180	
24.	R50 028 465	Special washer	2			
25.	Y50 061 452	Motor	2	⚠		
26.	R50 214 708	Motor fix plate	4			
27.	H00 000 332	P T T screw 4×10	17			
28.	Y50 030 707	Motor base	2			

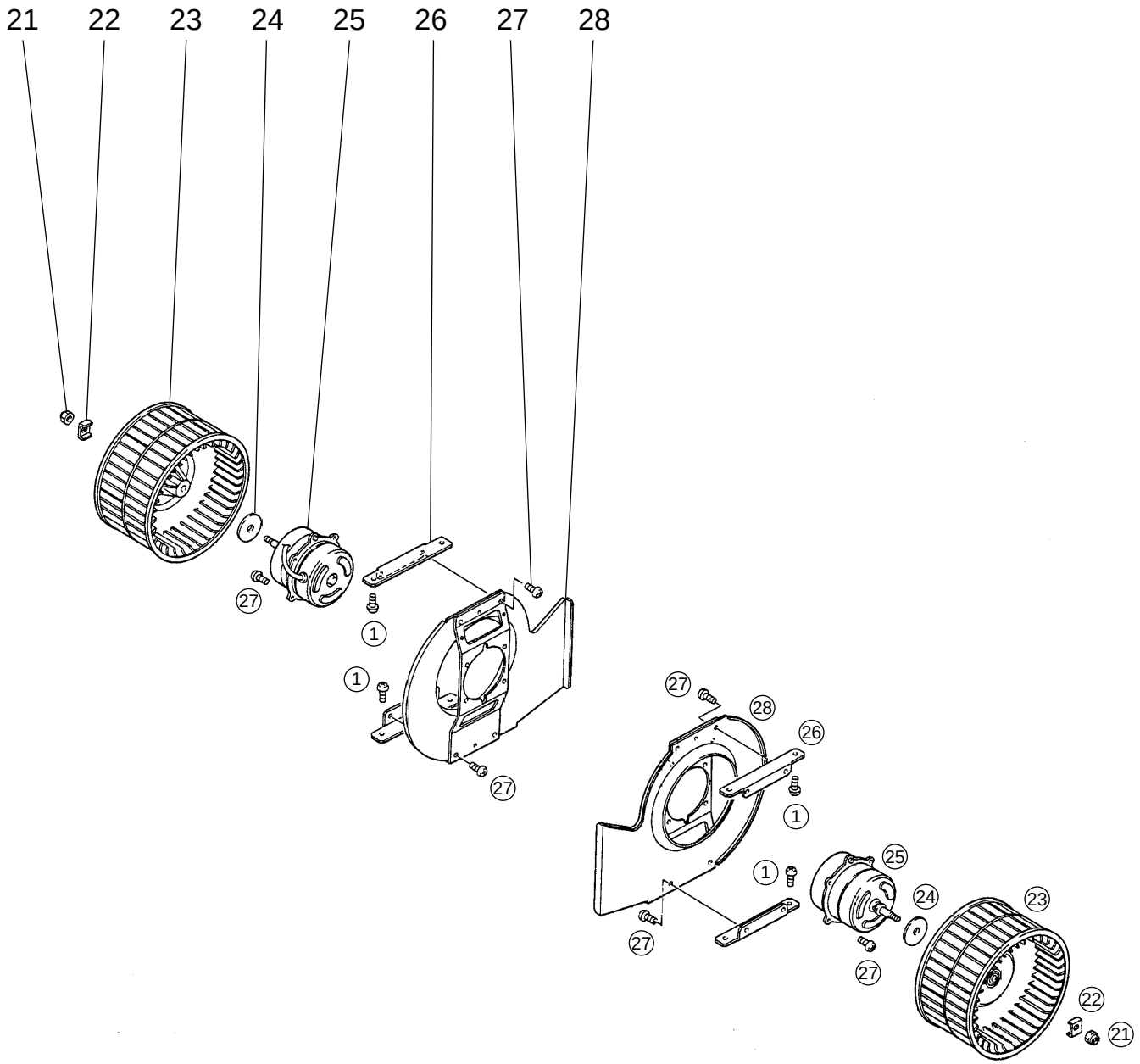
21
22
23
24
25
26
27
28
27
1
1
27
27
28
26
1
1
25
24
23
27
27
22
21

Model LGH-25RX3-E

No.	Parts No.	Name of part	Q'ty pcs/unit	Critical for safety	Remarks	Price
31.	Y50 061 693	Damper motor cover	1			
32.	R50 213 715	Damper support	1			
33.	M31 234 089	Special bush	2			
34.	R50 095 156	Pull spring	1			
35.	R50 213 713	Damper	1			
36.	Y50 061 260	Damper motor	1	⚠	220-240V	
37.	R50 054 225	Bush	2			
38.	R50 230 150	Rod	1			
39.	R50 399 224	Cord clip	2			
40.	Y50 061 216	Thermistor	1	⚠		
41.	R50 399 223	Cord clip	2			
42.	Y50 061 706	Cover plate	1			
43.	K83 170 228	Cord band	1			
44.	M45 017 228	Cord band	1			
45.	Y50 047 216	Transformer	1	⚠	230WAC	
46.	R50 385 283	Capacitor	2	⚠	2.5μF・440WAC	
47.	H00 011 008	P T screw 4×8(BS)	1		For earth	
48.	H00 013 076	Lock washer	2			
49.	H00 000 488	P T T screw 4×12	2			
50.	R50 072 236	Terminal	1	⚠	4P	
51.	Y50 061 226	Insulation plate	1			
52.	Y50 061 708	PCB fixplate	1			
53.	H00 000 003	P P screw 4×8	2			
54.	Y50 061 171	PCB assy	1	⚠	LG-X01-E	
55.	X40 139 095	Spacer	4			
56.	D42 019 095	Spacer	3			
57.	M35 164 224	Cord clip	1			
58.	Y50 047 226	Cord bush	2			
59.	K83 223 225	Bush	1			

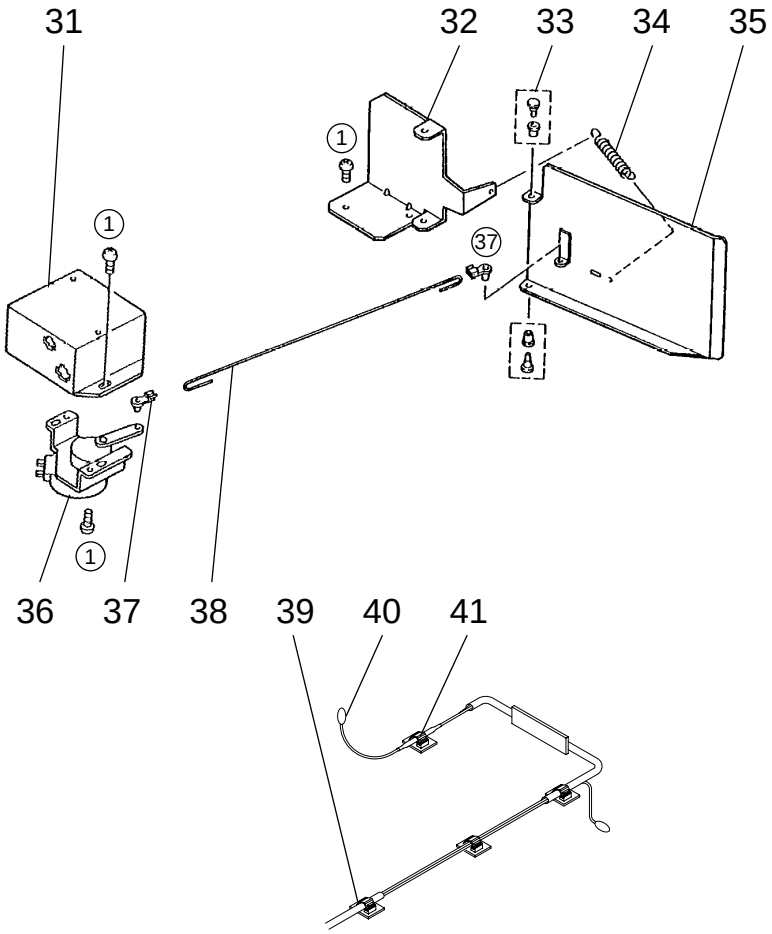
31
32
33
34
35
1
1
37
1
36
37
38
39
40
41

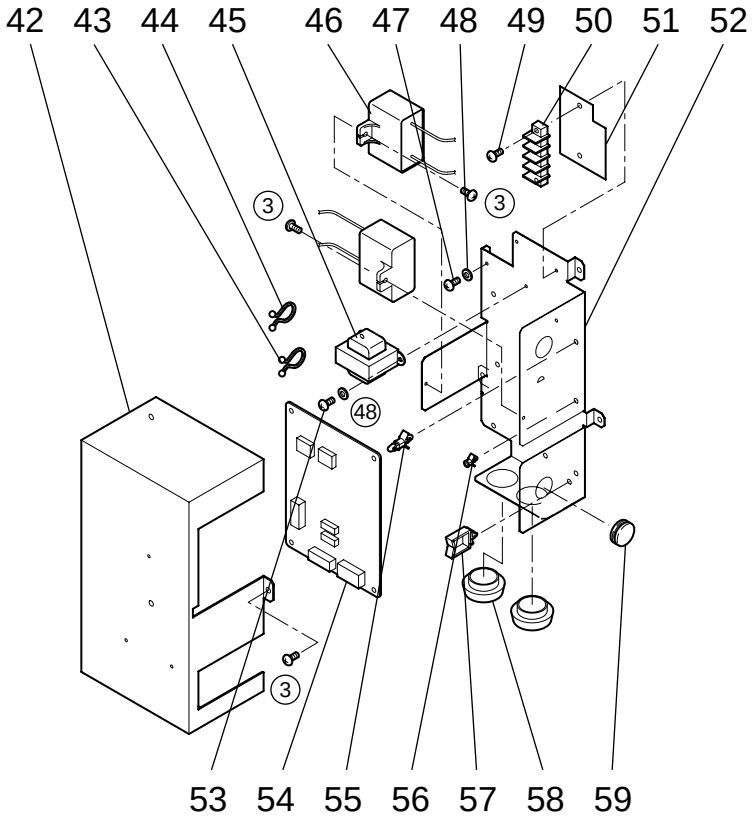
42
43
44
45
46
47
48
49
50
51
52
3
3
48
3
53
54
55
56
57
58
59

Model LGH-35RX3-E

No.	Parts No.	Name of part	Q'ty pcs/unit	Critical for safety	Remarks	Price
1.	H00 312 007	P T T screw 4×6	23			
2.	R50 323 609	Pipe guide	4			
3.	Y50 061 704	Hanger	4			
4.	H00 000 487	P T T screw 4×8	34			
5.	R50 091 380	Hanger	4			
6.	H00 000 583	P T screw 5×12	8			
7.	R50 351 707	Maintenance cover	1			
8.	R50 396 381	Core guide	1			
9.	Y50 062 717	Filter	2	⚠		
10.	R50 215 710	Lossnay core	2	⚠		
11.	R50 396 382	Core guide	1			
12.	R50 354 704	Cover	2			
13.	R50 213 344	Hinge	1			
14.	M34 074 017	Special screw 4×11	1			
15.	Y50 029 712	Fix plate	1			
16.	R50 365 717	Sound absorbing material	1			

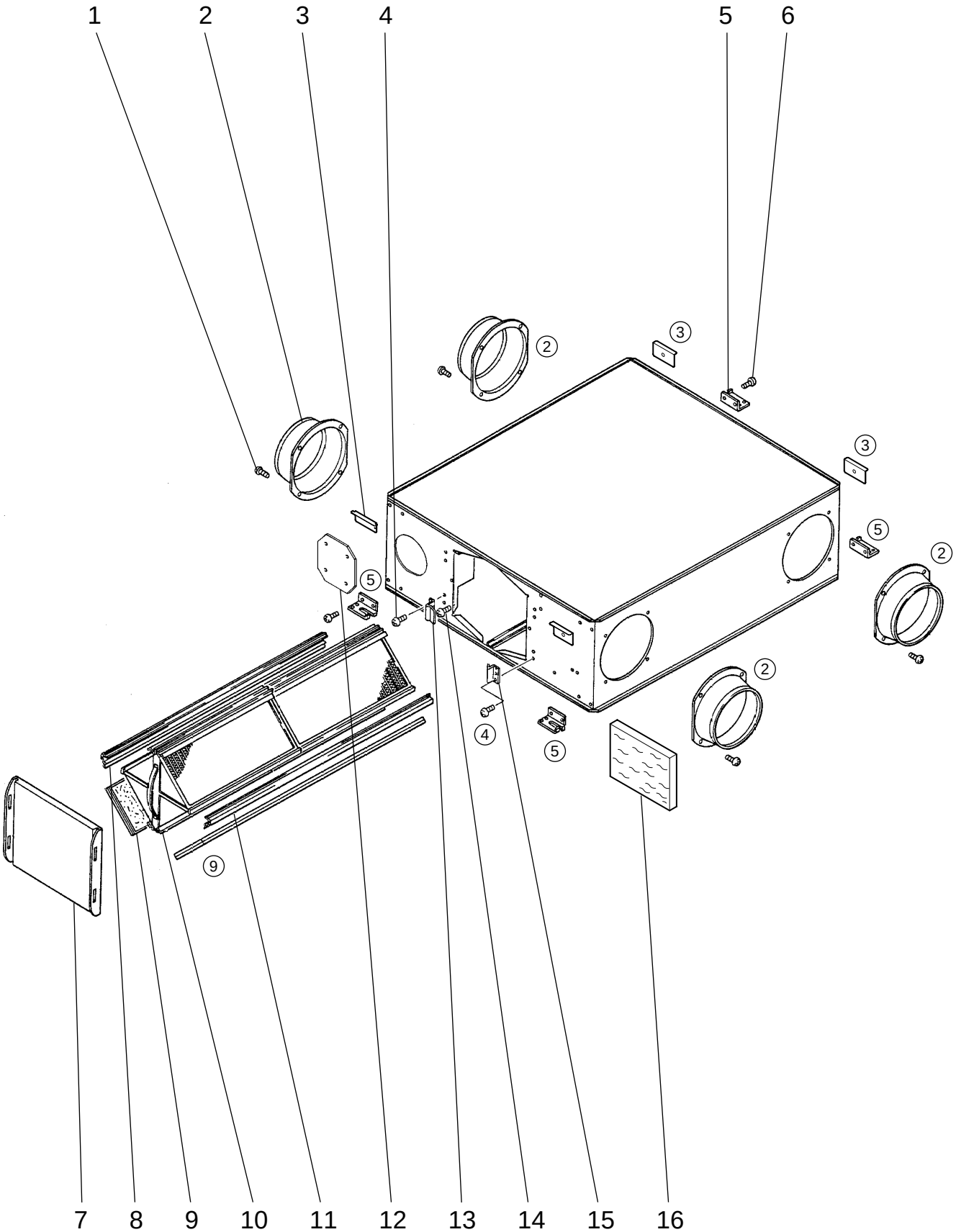
1
2
3
4
5
6
7
8
9
10
11
12
13
14
15
16

Model LGH-35RX3-E

No.	Parts No.	Name of part	Q'ty pcs/unit	Critical for safety	Remarks	Price
21.	R50 331 067	Special nut	2			
22.	M34 398 077	Tab washer	2			
23.	R50 351 480	Centrifugal fan	2	⚠	ϕ 220	
24.	R50 215 708	Fan base	2			
25.	Y50 062 451	Motor	2	⚠		
26.	R50 351 713	Motor base	2			
27.	H00 000 390	P T screw 5×10	20			

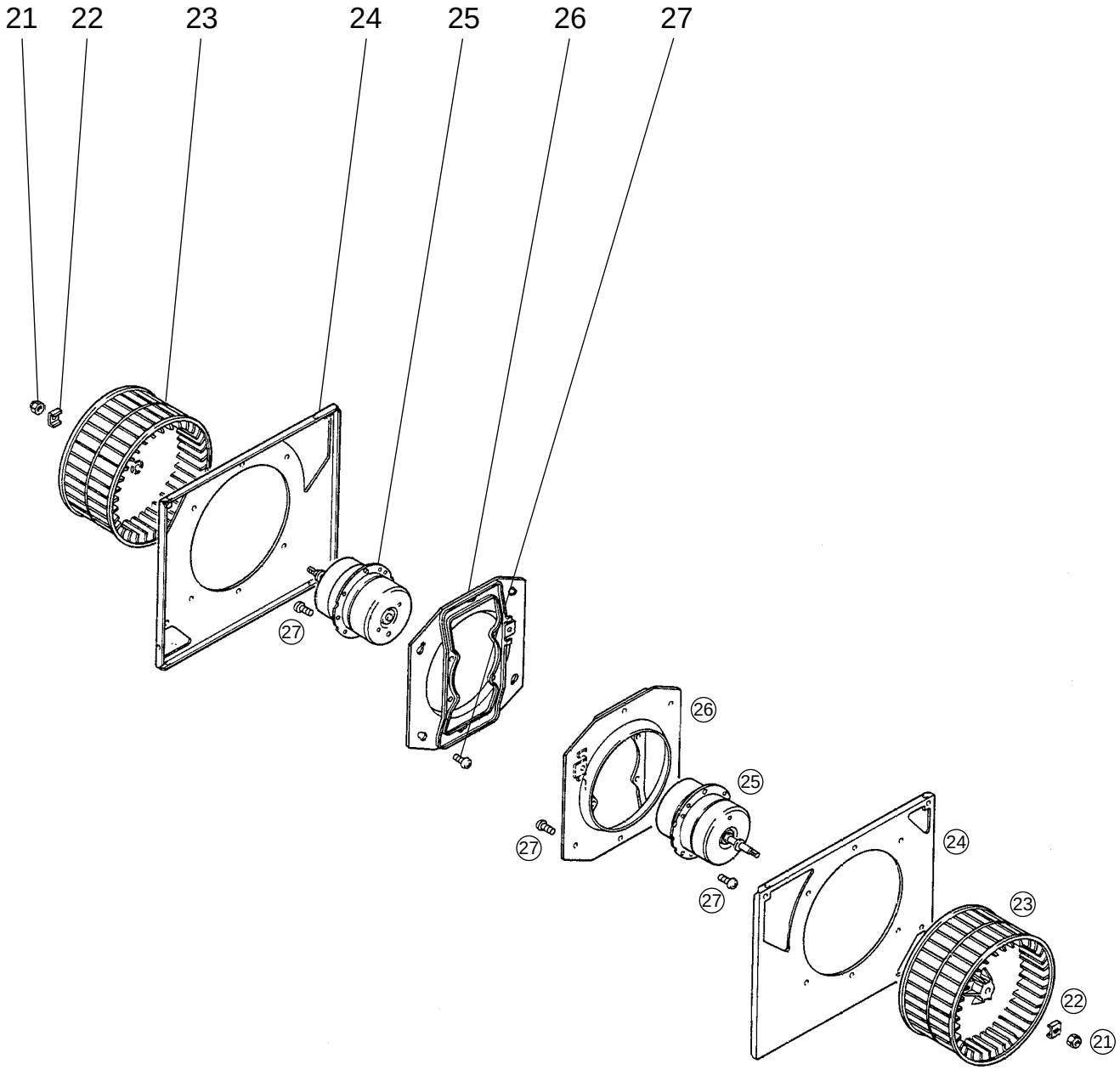
21
22
23
24
25
26
27
27
26
25
27
27
24
23
22
21

Model LGH-35RX3-E

No.	Parts No.	Name of part	Q'ty pcs/unit	Critical for safety	Remarks	Price
31.	Y50 061 693	Damper motor cover	1			
32.	R50 069 156	Pull spring	1			
33.	R50 215 716	Damper support	1			
34.	M31 234 089	Special bush	2			
35.	R50 215 715	Damper	1			
36.	Y50 061 260	Damper motor	1	⚠	220-240V	
37.	R50 054 225	Bush	2			
38.	R50 231 150	Rod	1			
39.	Y50 062 215	Thermistor	1	⚠		
40.	R50 399 223	Cord clip	2			
41.	R50 399 224	Cord clip	3			
42.	Y50 061 706	Cover plate	1			
43.	K83 170 228	Cord band	1			
44.	M45 017 228	Cord band	1			
45.	Y50 047 216	Transformer	1	⚠	230WAC	
46.	R50 385 283	Capacitor	2	⚠	2.5μF・440WAC	
47.	H00 011 008	P T screw 4×8(BS)	1		For earth	
48.	H00 013 076	Lock washer	2			
49.	H00 000 488	P T T screw 4×12	2			
50.	R50 072 236	Terminal	1	⚠	4P	
51.	Y50 061 226	Insulation plate	1			
52.	Y50 061 708	PCB fixplate	1			
53.	H00 000 003	P P screw 4×8	2			
54.	Y50 061 171	PCB assy	1	⚠	LG-X01-E	
55.	X40 139 095	Spacer	4			
56.	D42 019 095	Spacer	3			
57.	M35 164 224	Cord clip	1			
58.	Y50 047 226	Cord bush	2			
59.	K83 223 225	Bush	1			

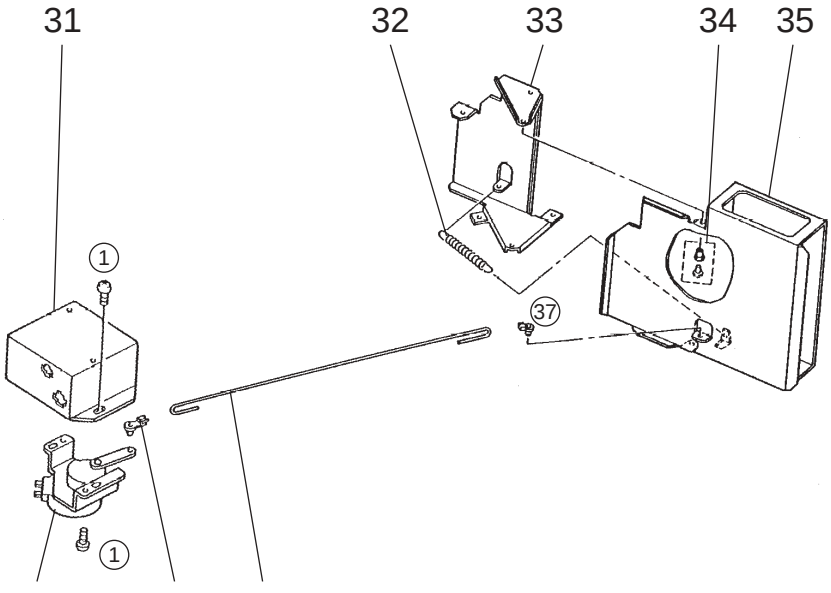
31
32
33
34
35
1
37
1
36
37
38

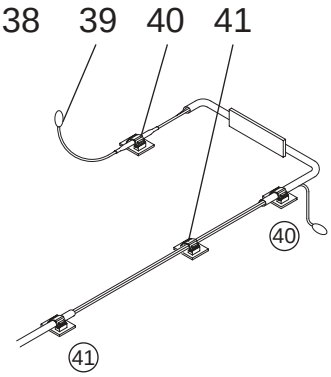
39
40
41
40
41

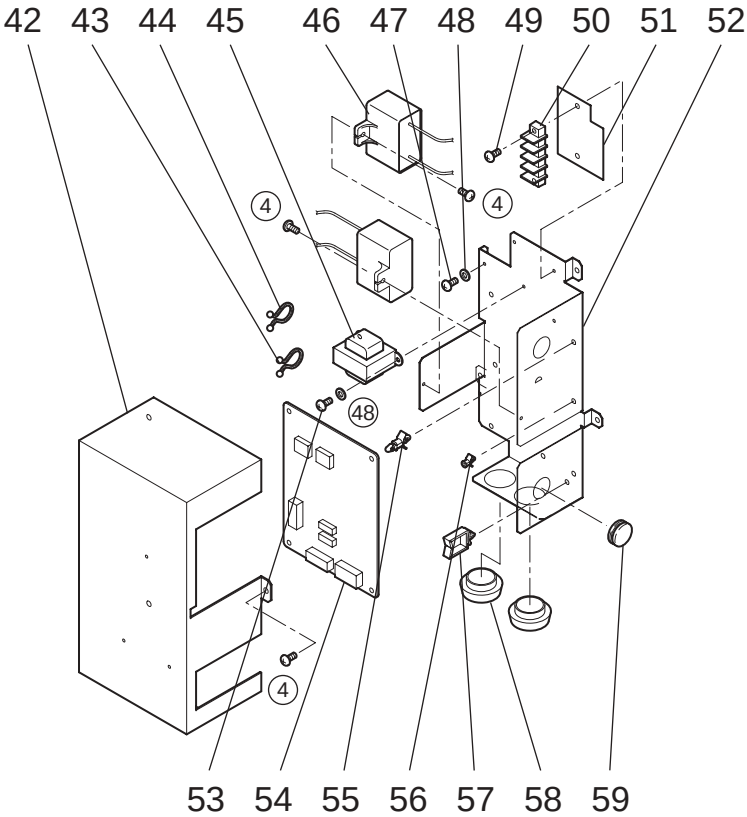
42
43
44
45
46
47
48
49
50
51
52
4
4
4
48
53
54
55
56
57
58
59

Model LGH-50RX3-E

No.	Parts No.	Name of part	Q'ty pcs/unit	Critical for safety	Remarks	Price
1.	H00 312 007	P T T screw 4×6	23			
2.	R50 028 610	Flange	4			
3.	Y50 061 704	Hanger	4			
4.	H00 000 487	P T T screw 4×8	34			
5.	R50 091 380	Hanger	4			
6.	H00 000 583	P T screw 5×12	8			
7.	R50 351 707	Maintenance cover	1			
8.	R50 216 381	Core guide	1			
9.	Y50 062 718	Filter	2	⚠		
10.	R50 216 710	Lossnay core	2	⚠		
11.	R50 263 381	Core guide	1			
12.	R50 351 708	Cover	2			
13.	R50 213 344	Hinge	1			
14.	M34 074 017	Special screw 4×11	1			
15.	Y50 029 712	Fix plate	1			
16.	R50 351 717	Sound absorbing material	1			

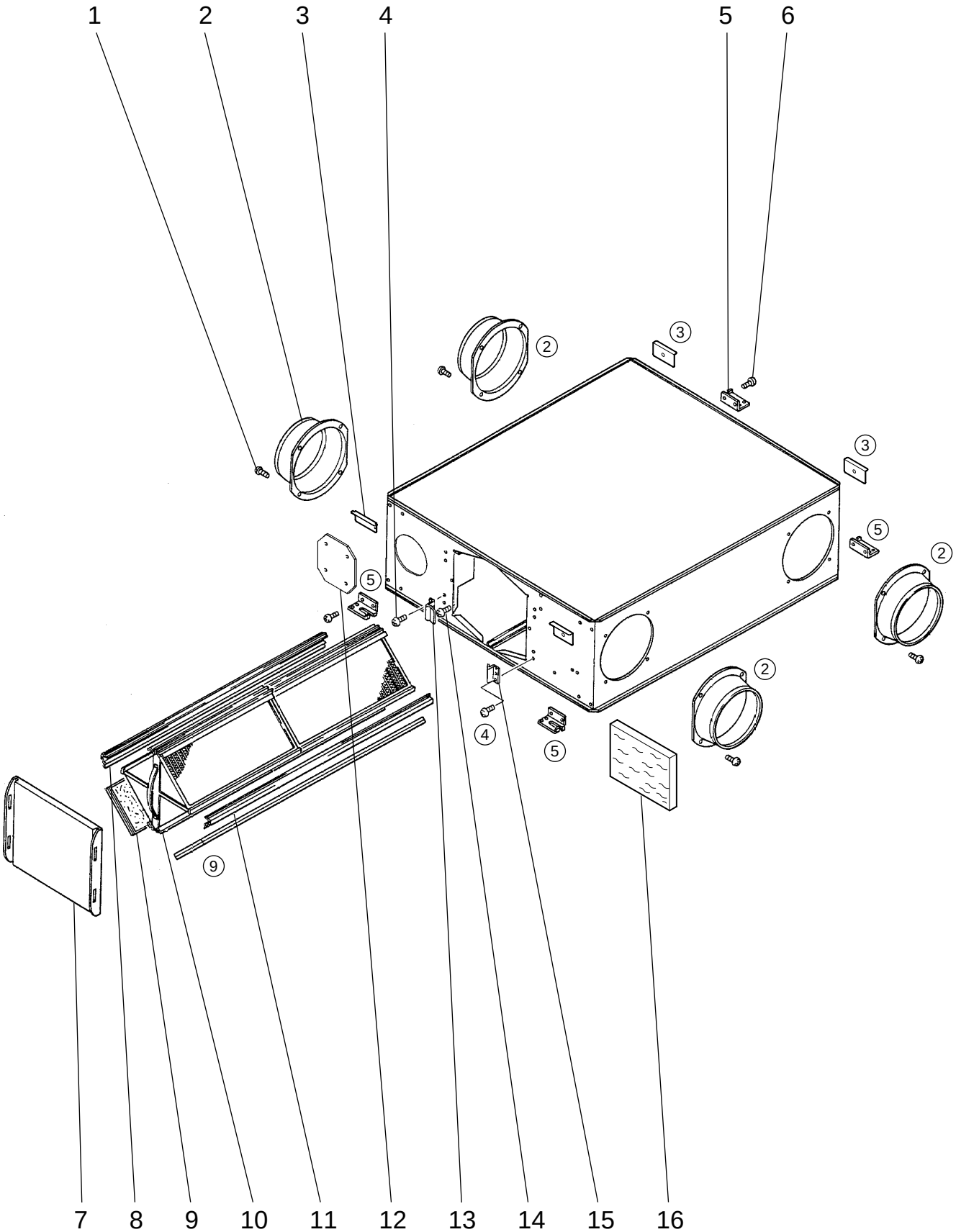
1
2
3
4
5
6
7
8
9
10
11
12
13
14
15
16
②
③
④
⑤
⑨

Model LGH-50RX3-E

No.	Parts No.	Name of part	Q'ty pcs/unit	Critical for safety	Remarks	Price
21.	R50 331 067	Special nut	2			
22.	M34 398 077	Tab washer	2			
23.	R50 351 480	Centrifugal fan	2	⚠	ϕ 220	
24.	R50 215 708	Motor base	2			
25.	Y50 062 452	Motor	2	⚠		
26.	R50 351 713	Motor fix plate	2			
27.	H00 000 390	P T screw 5×10	20			

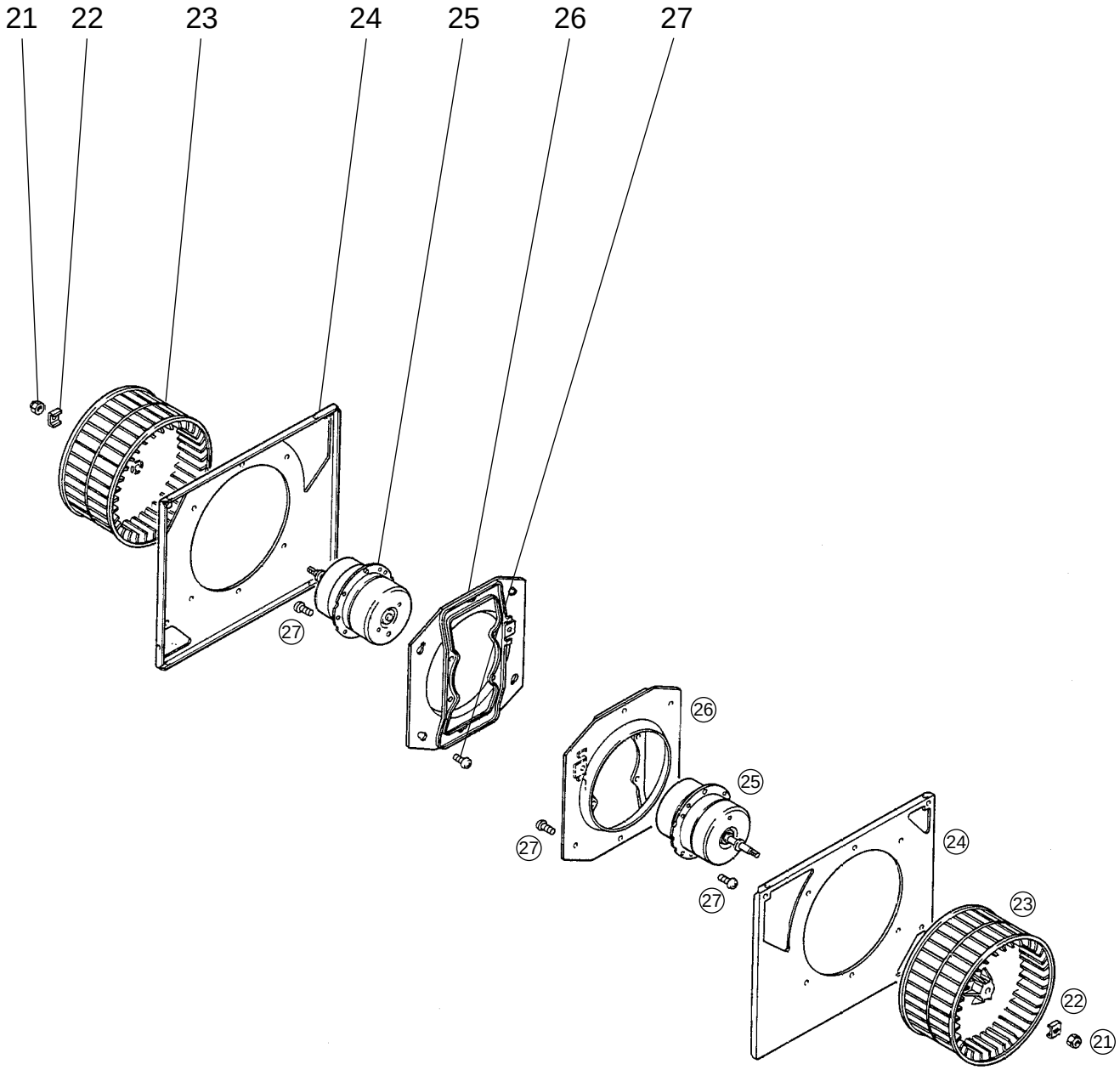
21
22
23
24
25
26
27
27
26
25
27
27
24
23
22
21

Model LGH-50RX3-E

No.	Parts No.	Name of part	Q'ty pcs/unit	Critical for safety	Remarks	Price
31.	Y50 061 693	Damper motor cover	1			
32.	R50 069 156	Pull spring	1			
33.	R50 215 716	Damper support	1			
34.	M31 234 089	Special bush	2			
35.	R50 215 715	Damper	1			
36.	Y50 061 260	Damper motor	1	⚠	220-240V	
37.	R50 054 225	Bush	2			
38.	R50 232 150	Rod	1			
39.	Y50 062 216	Thermistor	1	⚠		
40.	R50 399 223	Cord clip	2			
41.	R50 399 224	Cord clip	3			
42.	Y50 061 706	Cover plate	1			
43.	K83 170 228	Cord band	1			
44.	M45 017 228	Cord band	1			
45.	Y50 047 216	Transformer	1	⚠	230WAC	
46.	Y50 057 283	Capacitor	2	⚠	4μF・440WAC	
47.	H00 011 008	P T screw 4×8(BS)	1		For earth	
48.	H00 013 076	Lock washer	2			
49.	H00 000 488	P T T screw 4×12	2			
50.	R50 072 236	Terminal	1	⚠	4P	
51.	Y50 061 226	Insulation plate	1			
52.	Y50 061 708	PCB fixplate	1			
53.	H00 000 003	P P screw 4×8	2			
54.	Y50 061 171	PCB assy	1	⚠	LG-X01-E	
55.	X40 139 095	Spacer	4			
56.	D42 019 095	Spacer	3			
57.	M35 164 224	Cord clip	1			
58.	Y50 047 226	Cord bush	2			
59.	K83 223 225	Bush	1			

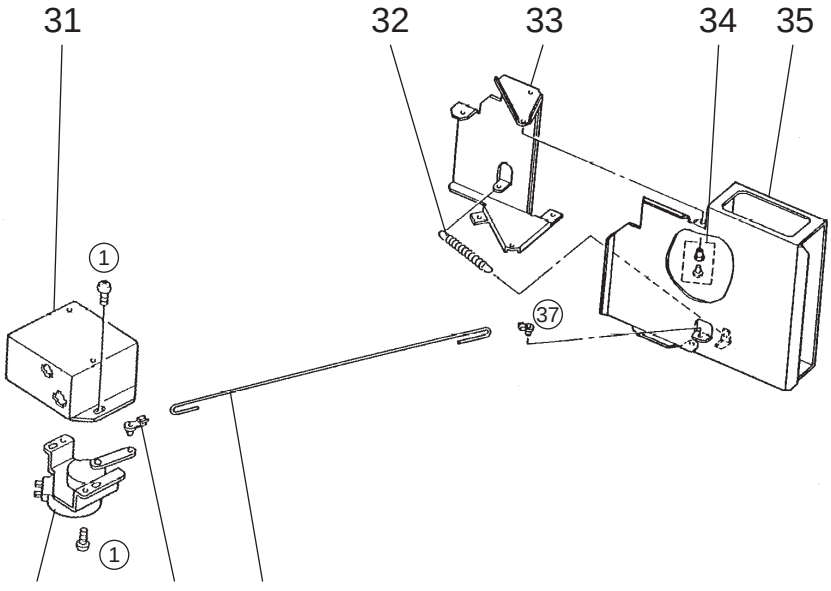
31
32
33
34
35
1
37
1
36
37
38

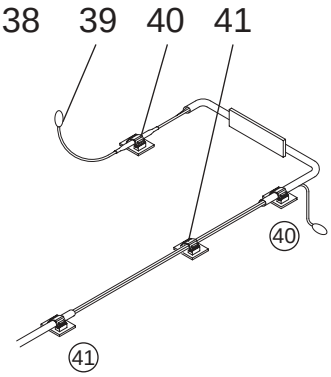
39
40
41
40
41

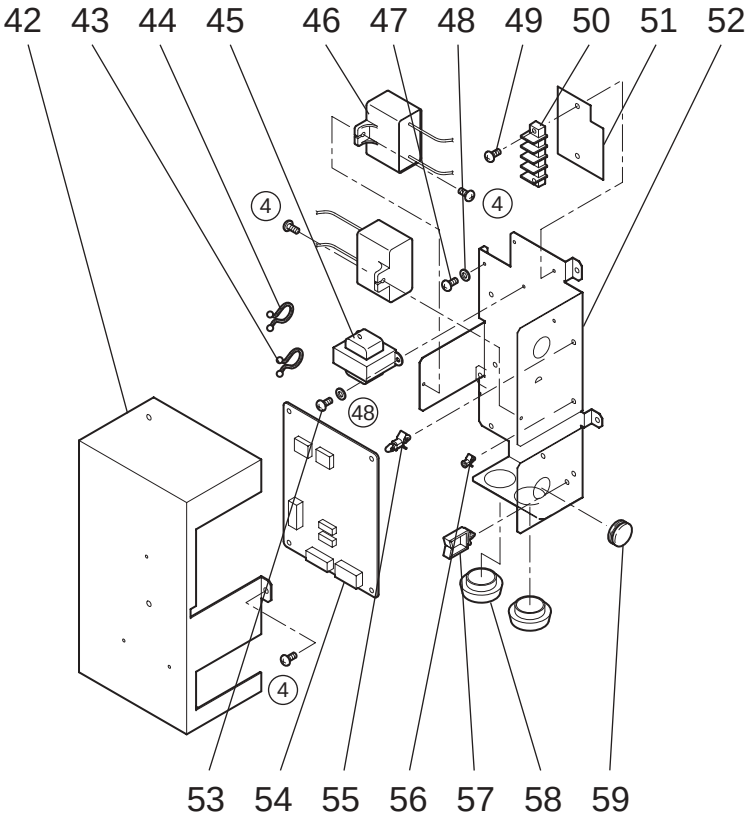
42
43
44
45
46
47
48
49
50
51
52
4
4
48
4
53
54
55
56
57
58
59

Model LGH-80RX3-E

No.	Parts No.	Name of part	Q'ty pcs/unit	Critical for safety	Remarks	Price
1.	H00 000 487	P T T screw 4×8	18			
2.	Y50 021 609	Flange	4			
3.	R50 095 380	Hanger	4			
4.	H00 000 244	P T screw 6×12	16			
5.	R50 397 708	Maintenance cover	1			
6.	R50 218 381	Core guide	1			
7.	Y50 063 717	Filter	2	⚠		
8.	R50 218 710	Lossnay core	2	⚠		
9.	R50 265 381	Core guide	1			
10.	R50 358 704	Cover	2			
11.	R50 213 344	Hinge	1			
12.	M34 074 017	Special screw 4×11	1			
13.	Y50 029 712	Fix plate	2			
14.	R50 358 717	Sound absorbing material	1			

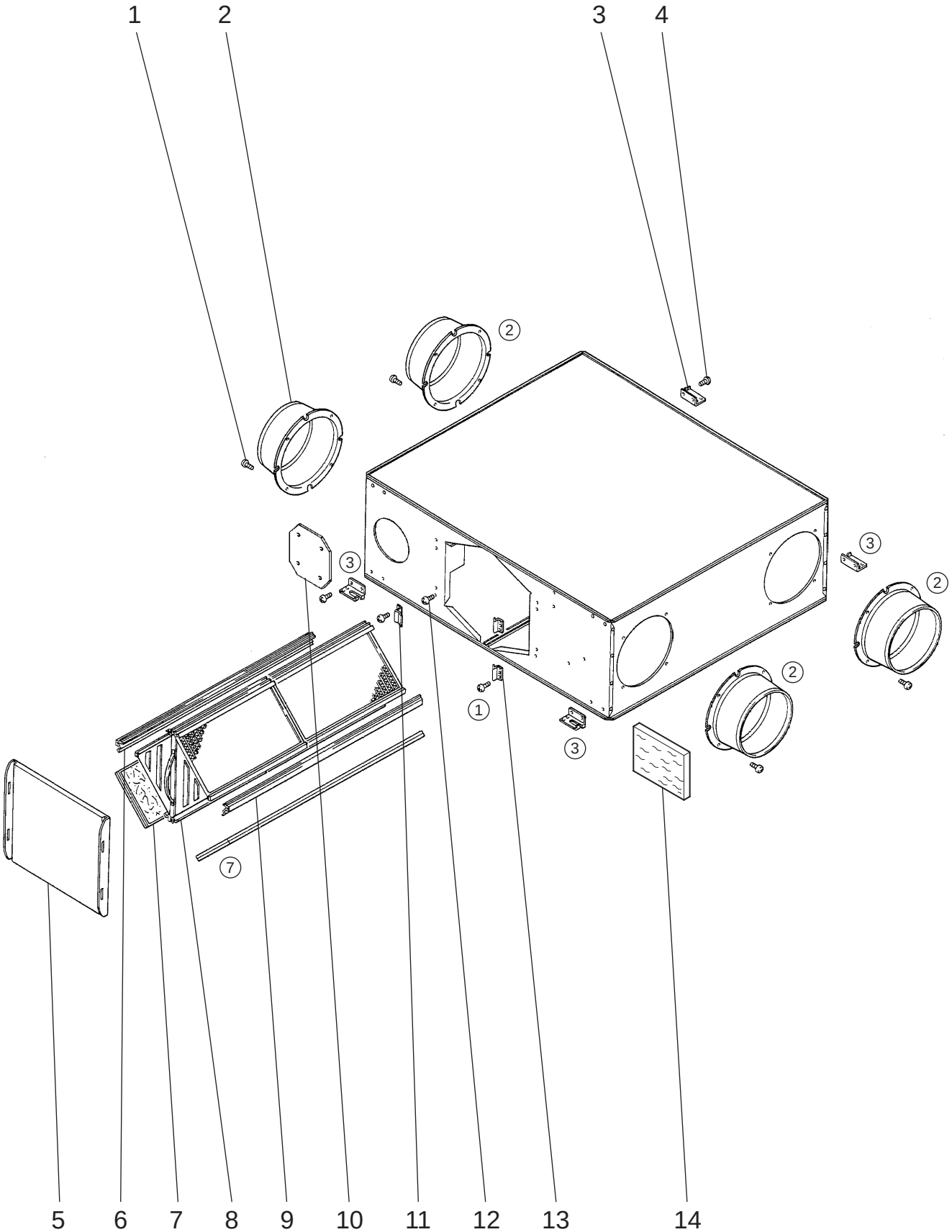
1
2
3
4
②
③
②
③
②
①
③
⑦
5
6
7
8
9
10
11
12
13
14

Model LGH-80RX3-E

No.	Parts No.	Name of part	Q'ty pcs/unit	Critical for safety	Remarks	Price
21.	R50 218 067	Special nut	2			
22.	K83 466 113	Special washer(12)	2			
23.	R50 357 480	Centrifugal fan	2	⚠	ϕ 250	
24.	H00 157 008	P T screw 6×20	8			
25.	M34 043 080	Special washer	8			
26.	D40 135 095	Spacer	8			
27.	R50 217 225	Bush	8			
28.	Y50 033 707	Fan base	2			
29.	R50 264 711	Inlet plate	2			
30.	R50 264 712	Motor base	2			
31.	H00 189 007	P T T screw 5×10	16			
32.	Y50 063 451	Motor	2	⚠		
33.	H00 061 050	Nut (6)	8			

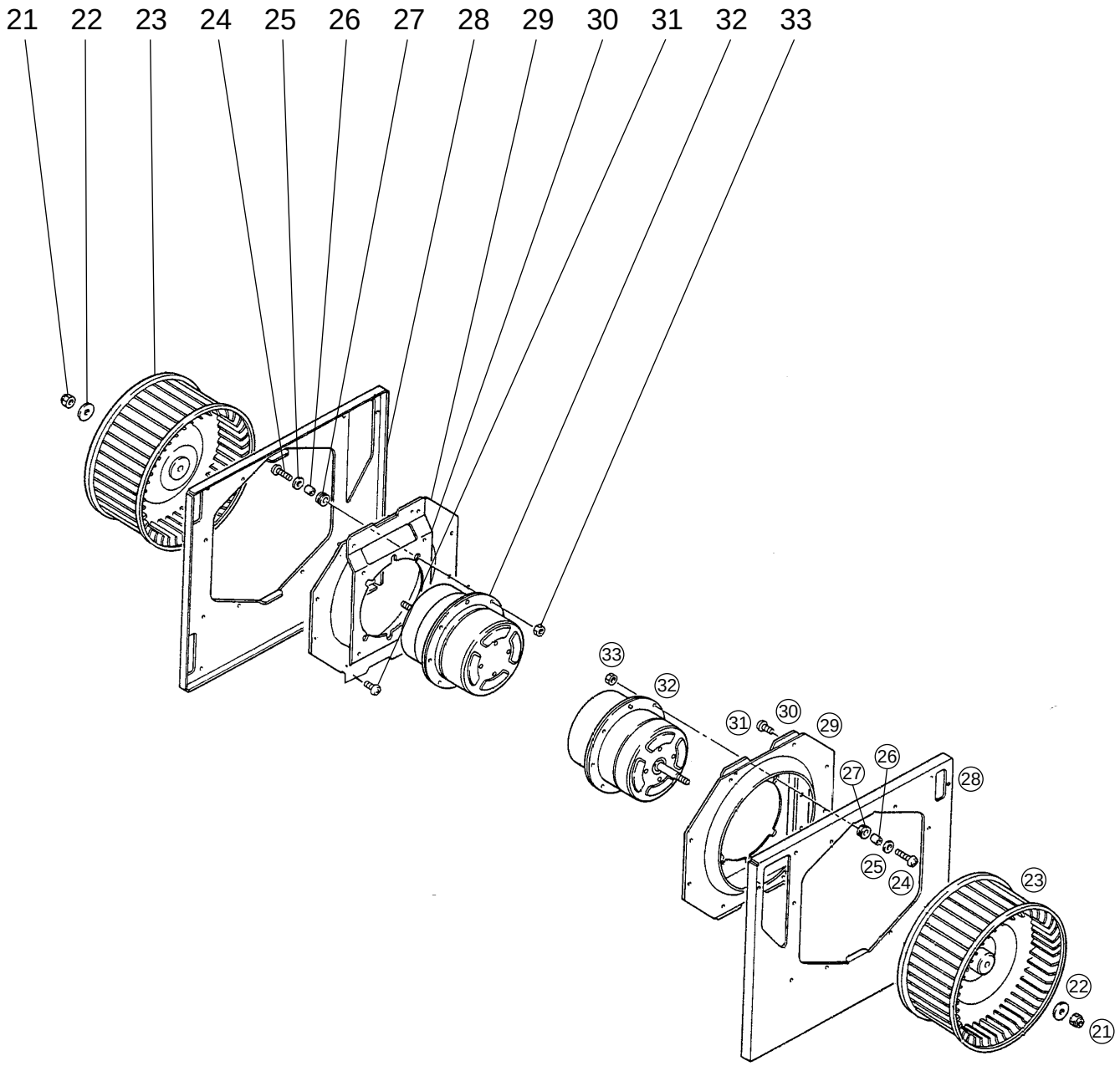
21
22
23
24
25
26
27
28
29
30
31
32
33
33
32
31
30
29
26
27
28
25
24
23
22
21

Model LGH-80RX3-E

No.	Parts No.	Name of part	Q'ty pcs/unit	Critical for safety	Remarks	Price
41.	Y50 061 693	Damper motor cover	1			
42.	H00 312 007	P T T screw 4×6	2			
43.	R50 074 156	Pull spring	1			
44.	R50 218 716	Damper support	1			
45.	M31 234 089	Special bush	2			
46.	R50 271 715	Damper	1			
47.	Y50 061 260	Damper motor	1	⚠	220-240V	
48.	R50 054 225	Bush	2			
49.	R50 265 150	Rod	1			
50.	Y50 063 215	Thermistor	1	⚠		
51.	R50 399 223	Cord clip	4			
52.	R50 399 224	Cord clip	4			
53.	Y50 061 706	Cover plate	1			
54.	K83 170 228	Cord band	1			
55.	M45 017 228	Cord band	1			
56.	H00 000 332	P T T screw 4×10	1			
57.	Y50 047 216	Transformer	1	⚠	230WAC	
58.	Y50 063 283	Capacitor	2	⚠	7.0μF·440WAC	
59.	H00 011 008	P T screw 4×8(BS)	1		For earth	
60.	H00 013 076	Lock washer	1			
61.	H00 000 488	P T T screw 4×12	2			
62.	R50 072 236	Terminal	1	⚠	4P	
63.	Y50 061 226	Insulation plate	1			
64.	Y50 061 708	PCB fixplate	1			
65.	H00 000 003	P P screw 4×8	2			
66.	Y50 061 171	PCB assy	1	⚠	LG-X01-E	
67.	X40 139 095	Spacer	4			
68.	D42 019 095	Spacer	3			
69.	M35 164 224	Cord clip	1			
70.	Y50 047 226	Cord bush	2			
71.	K83 223 225	Bush	1			

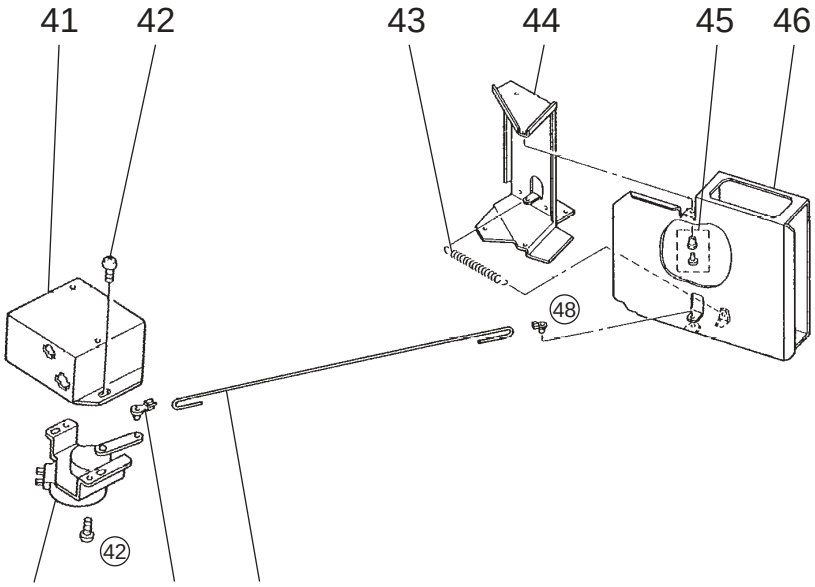
41
42
43
44
45
46
48
42
47
48
49

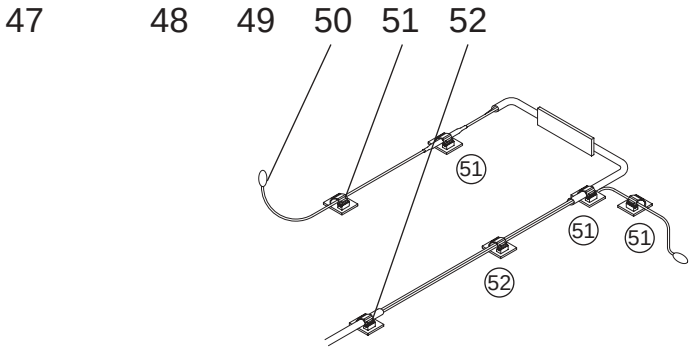
50
51
52
51
51
51
52

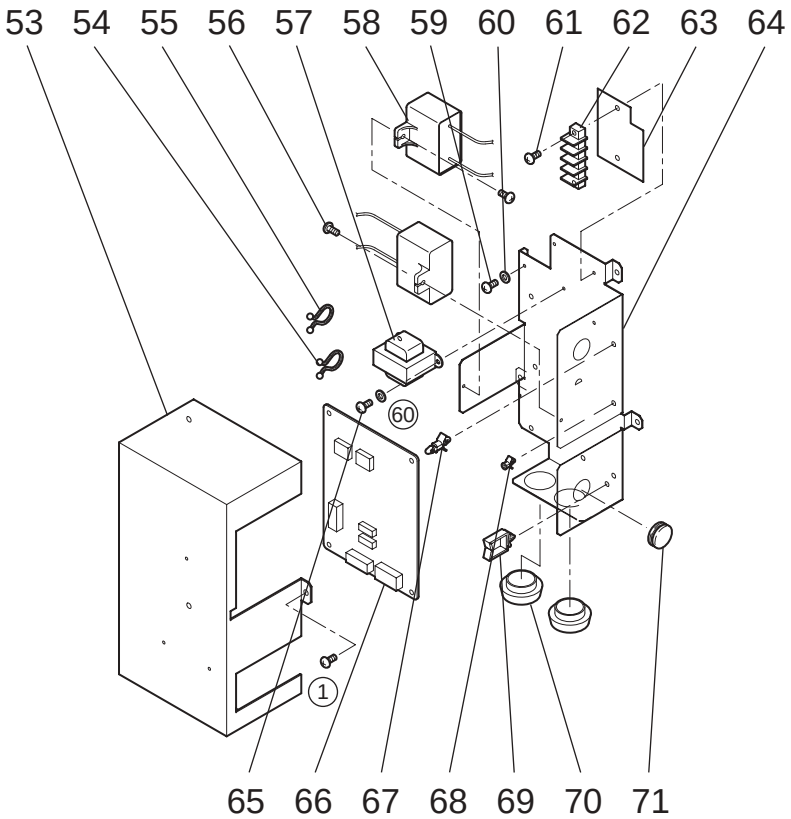
53
54
55
56
57
58
59
60
61
62
63
64
60
1
65
66
67
68
69
70
71

Model LGH-100RX3-E,LGH-100RX3-E-60

No.	Parts No.	Name of part	Q'ty pcs/unit	Critical for safety	Remarks	Price
1.	H00 000 487	P T T screw 4×8	18			
2.	Y50 021 609	Flange	4			
3.	R50 095 380	Hanger	4			
4.	H00 000 244	P T screw 6×12	16			
5.	R50 397 708	Maintenance cover	1			
6.	R50 219 381	Core guide	1			
7.	Y50 063 718	Filter	2	⚠		
8.	R50 219 710	Lossnay core	2	⚠		
9.	R50 266 381	Core guide	1			
10.	R50 358 704	Cover	2			
11.	R50 213 344	Hinge	1			
12.	M34 074 017	Special screw 4×11	1			
13.	Y50 029 712	Fix plate	2			
14.	R50 358 717	Sound absorbing material	1			

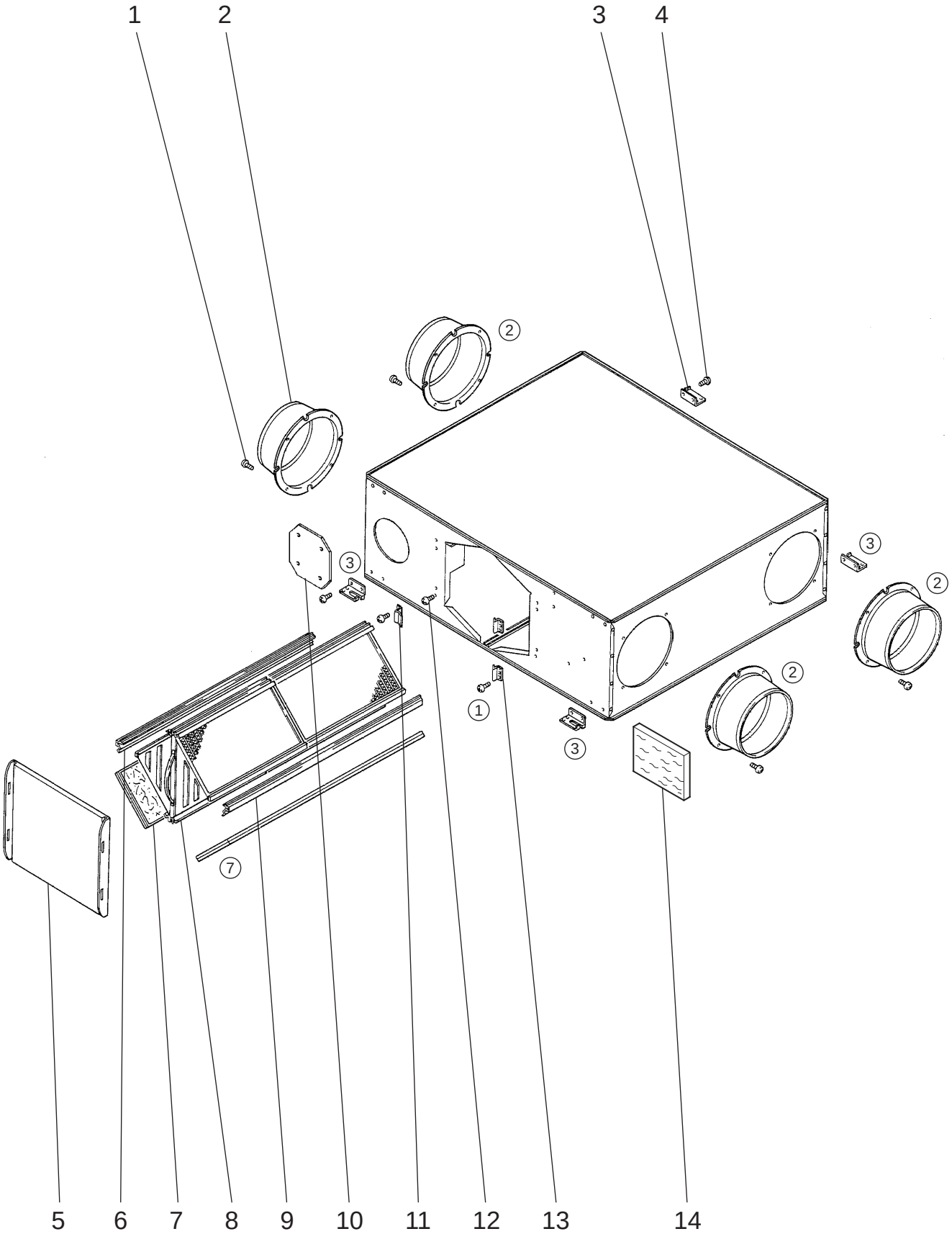
1
2
3
4
②
③
②
③
②
①
③
⑦
5
6
7
8
9
10
11
12
13
14

Model LGH-100RX3-E,LGH-100RX3-E-60

No.	Parts No.	Name of part	Q'ty pcs/unit	Critical for safety	Remarks	Price
21.	R50 218 067	Special nut	2			
22.	K83 466 113	Special washer(12)	2			
23.	R50 357 480	Centrifugal fan	2	⚠	ϕ250	
24.	H00 157 008	P T screw 6×20	8			
25.	M34 043 080	Special washer	8			
26.	R50 000 095	Spacer	8			
27.	R50 217 225	Bush	8			
28.	Y50 033 707	Fan base	2			
29.	R50 264 711	Inlet plate	2			
30.	R50 218 712	Motor base	2			
31.	H00 189 007	P T T screw 5×10	16			
32.	Y50 063 452	Motor	2	⚠	50Hz	
32.	Y50 063 453	Motor	2	⚠	60Hz	
33.	H00 061 050	Nut (6)	8			

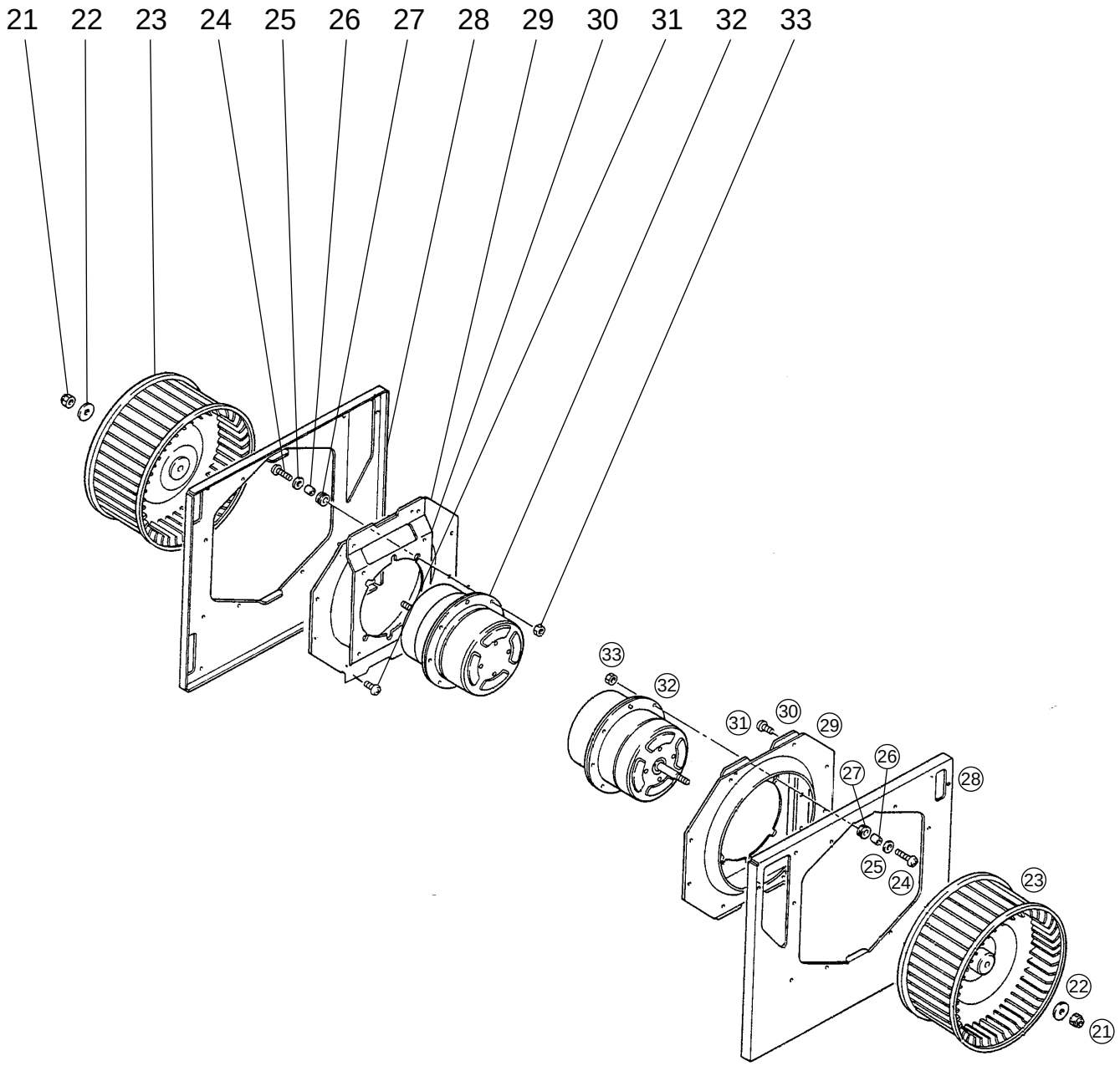
21
22
23
24
25
26
27
28
29
30
31
32
33

Model LGH-100RX3-E,LGH-100RX3-E-60

No.	Parts No.	Name of part	Q'ty pcs/unit	Critical for safety	Remarks	Price
41.	Y50 061 693	Damper motor cover	1			
42.	H00 312 007	P T T screw 4×6	2			
43.	R50 074 156	Pull spring	1			
44.	R50 218 716	Damper support	1			
45.	M31 234 089	Special bush	2			
46.	R50 271 715	Damper	1			
47.	Y50 061 260	Damper motor	1	⚠	220-240V	
48.	R50 054 225	Bush	2			
49.	R50 265 150	Rod	1			
50.	Y50 063 216	Thermistor	1	⚠		
51.	R50 399 223	Cord clip	4			
52.	R50 399 224	Cord clip	4			
53.	Y50 061 706	Cover plate	1			
54.	K83 170 228	Cord band	1			
55.	M45 017 228	Cord band	1			
56.	H00 000 332	P T T screw 4×10	1			
57.	Y50 047 216	Transformer	1	⚠	230WAC	
58.	Y50 063 283	Capacitor	2	⚠	7.0μF·440WAC	
59.	H00 011 008	P T screw 4×8(BS)	1		For earth	
60.	H00 013 076	Lock washer	1			
61.	H00 000 488	P T T screw 4×12	2			
62.	R50 072 236	Terminal	1	⚠	4P	
63.	Y50 061 226	Insulation plate	1			
64.	Y50 061 708	PCB fixplate	1			
65.	H00 000 003	P P screw 4×8	2			
66.	Y50 061 171	PCB assy	1	⚠	LG-X01-E	
67.	X40 139 095	Spacer	4			
68.	D42 019 095	Spacer	3			
69.	M35 164 224	Cord clip	1			
70.	Y50 047 226	Cord bush	2			
71.	K83 223 225	Bush	1			

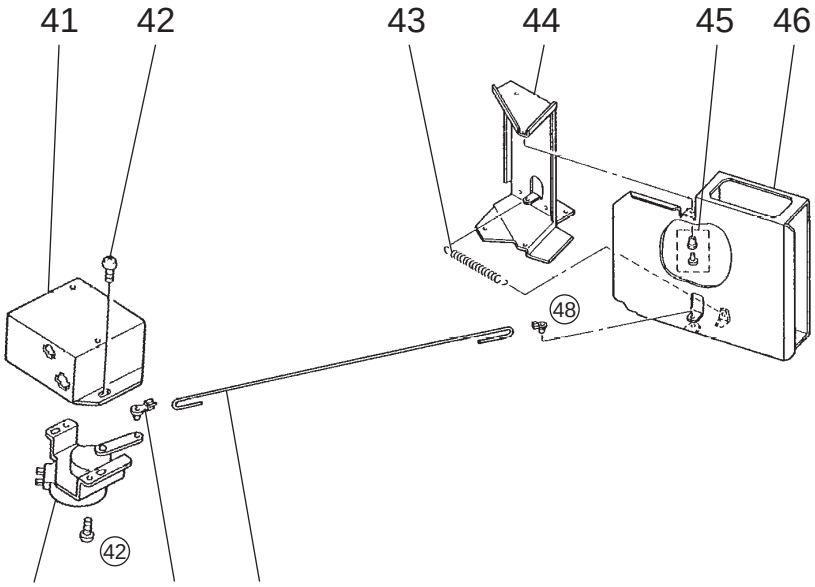
41
42
43
44
45
46
48
42
47
48
49

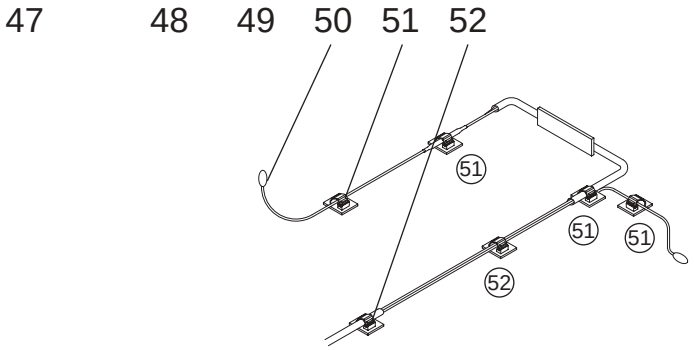
50
51
52
51
51
51
52

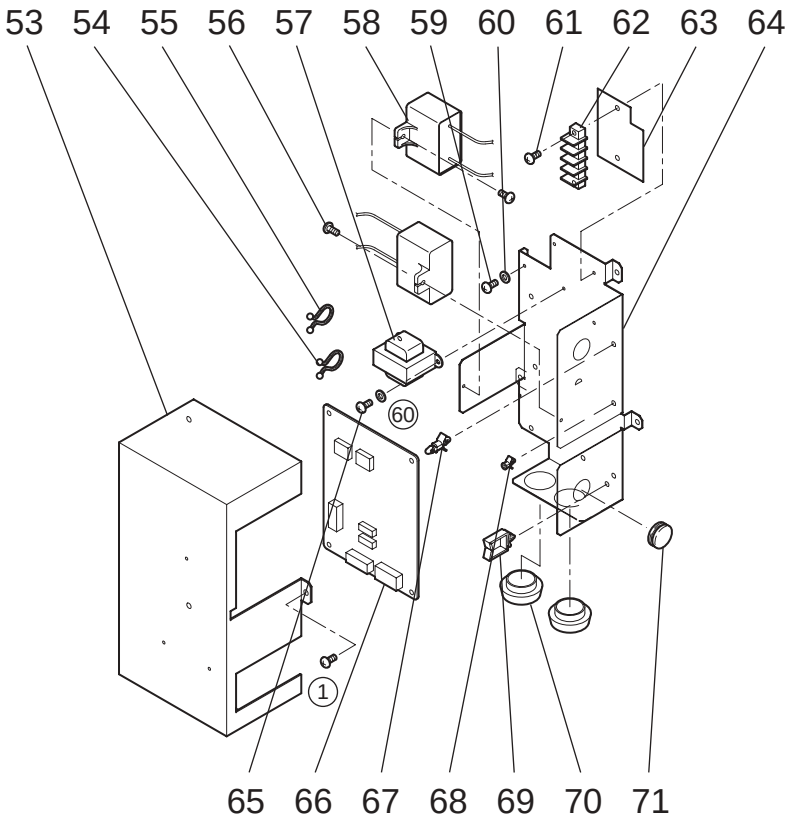
53
54
55
56
57
58
59
60
61
62
63
64
60
1
65
66
67
68
69
70
71

Model LGH-150RX3-E

No.	Parts No.	Name of part	Q'ty pcs/unit	Critical for safety	Remarks	Price
1.	H00 000 333	P T T screw 4×14	32			
2.	R50 220 607	Flange	4			
3.	R50 213 344	Hinge	2			
4.	R50 111 381	Fix plate	8			
5.	H00 000 244	P T screw 6×12	24			
6.	R50 397 708	Maintenance cover	2			
7.	R50 218 381	Core guide	2			
8.	Y50 063 717	Filter	4	⚠		
9.	R50 218 710	Lossnay core	4	⚠		
10.	R50 265 381	Core guide	2			
11.	H00 000 487	P T T screw 4×8	35			
12.	Y50 029 712	Fix plate	4			
13.	R50 358 717	Sound absorbing material	2			

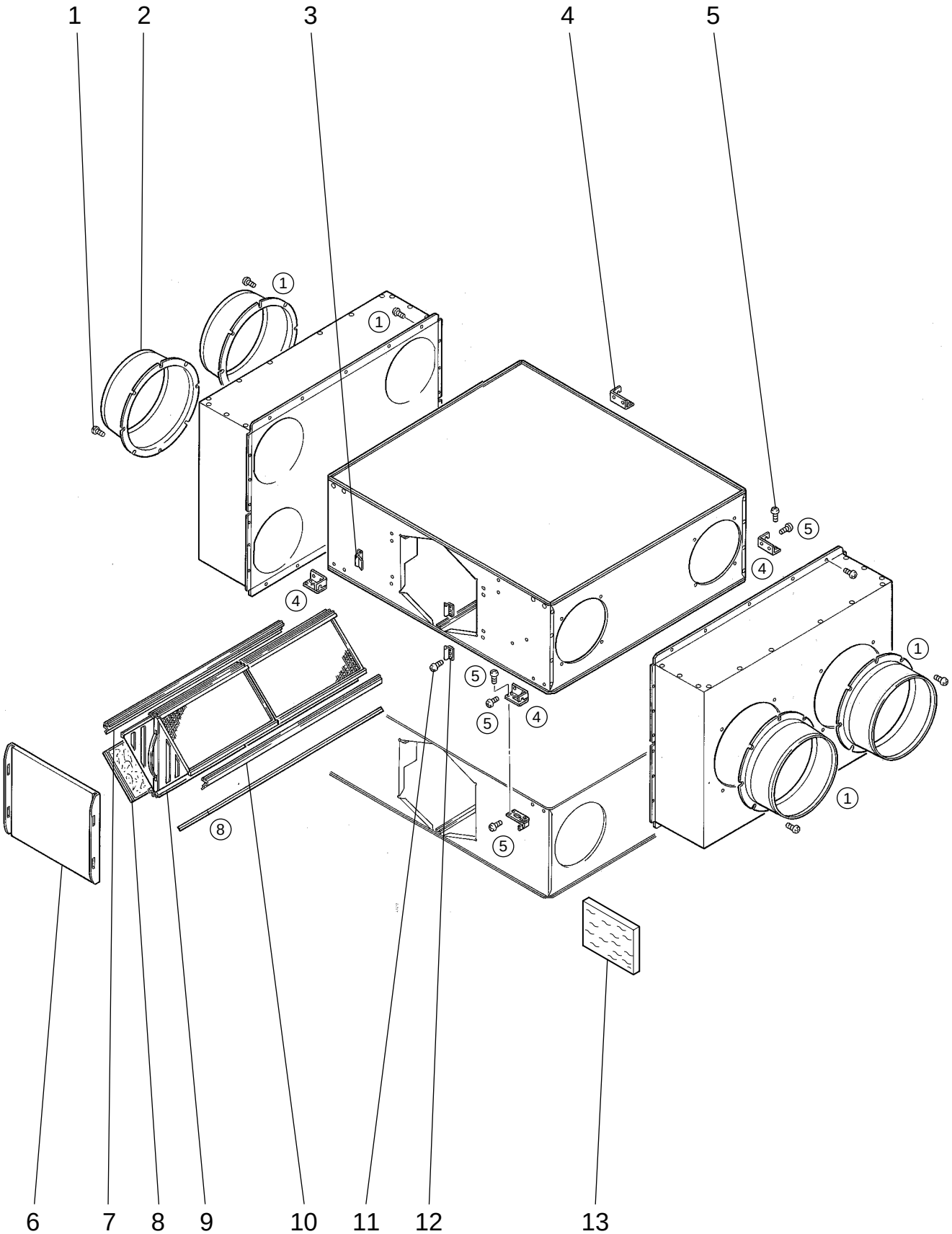
1
2
3
4
5
1
1
4
5
4
1
5
5
4
1
8
5
6
7
8
9
10
11
12
13

Model LGH-150RX3-E

No.	Parts No.	Name of part	Q'ty pcs/unit	Critical for safety	Remarks	Price
21.	R50 218 067	Special nut	4			
22.	K83 466 113	Special washer(12)	4			
23.	R50 357 480	Centrifugal fan	4	⚠	ϕ 250	
24.	H00 157 008	P T screw 6×20	16			
25.	M34 043 080	Special washer	16			
26.	D40 135 095	Spacer	16			
27.	R50 217 225	Bush	16			
28.	Y50 033 707	Fan base	4			
29.	H00 189 007	P T T screw 5×10	32			
30.	R50 264 711	Inlet plate	4			
31.	R50 264 712	Motor base	4			
32.	Y50 063 451	Motor	4	⚠		
33.	H00 061 050	Nut (6)	16			

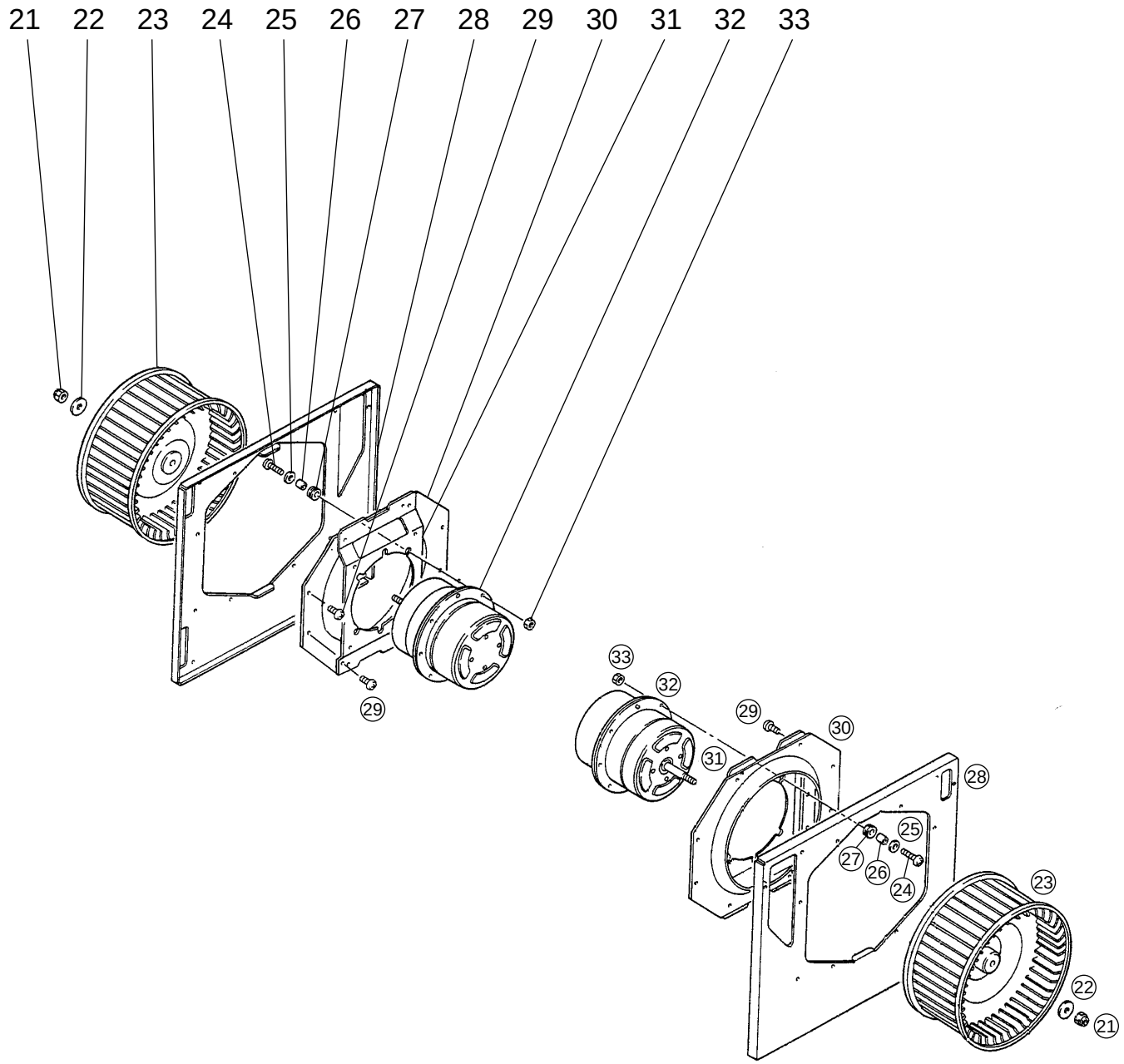
21
22
23
24
25
26
27
28
29
30
31
32
33
29
33
32
29
30
31
28
25
27
26
24
23
22
21

Model LGH-150RX3-E

No.	Parts No.	Name of part	Q'ty pcs/unit	Critical for safety	Remarks	Price
41.	Y50 061 693	Damper motor cover	2			
42.	H00 312 007	P T T screw 4×6	8			
43.	R50 074 156	Pull spring	2			
44.	R50 218 716	Damper support	2			
45.	M31 234 089	Special bush	4			
46.	R50 271 715	Damper	2			
47.	Y50 061 260	Damper motor	2	⚠	220-240V	
48.	R50 265 150	Rod	2			
49.	Y50 064 215	Thermistor	2	⚠		
50.	R50 399 223	Cord clip	8			
51.	R50 399 224	Cord clip	4			
52.	Y50 045 707	Cover plate	1			
53.	K83 170 228	Cord band	2			
54.	Y50 063 283	Capacitor	4	⚠	7.0μF・440WAC	
55.	H00 000 003	P P screw 4×8	5			
56.	H00 013 076	Lock washer	4			
57.	Y50 047 216	Transformer	2	⚠	230WAC	
58.	D42 019 095	Spacer	6			
59.	M35 164 224	Cord clip	8			
60.	Y50 064 706	Fix plate	1			
61.	X40 139 095	Spacer	8			
62.	R50 072 236	Terminal	1	⚠	4P	
63.	H00 000 488	P T T screw 4×12	4			
64.	Y50 061 226	Insulation plate	1			
65.	R50 069 236	Terminal	1		6P	
66.	D40 058 224	Cord clip	2			
67.	Y50 047 226	Cord bush	3			
68.	Y50 064 707	Hanger(cord)	1			
69.	Y50 061 171	PCB assy	2	⚠	LG-X01-E	
70.	R50 054 225	Bush	4			
71.	H00 011 008	P T screw 4×8(BS)	1			

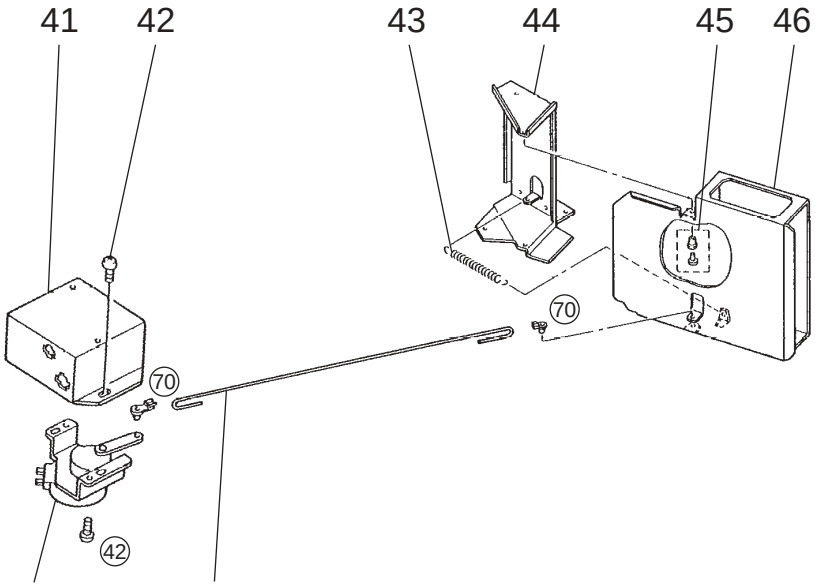
41
42
43
44
45
46
70
70
42
47
48

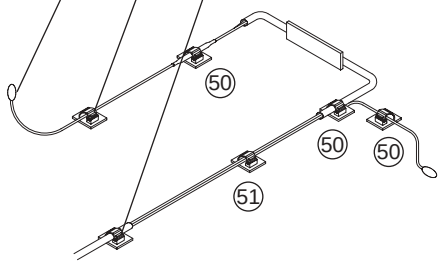
49
50
51
50
50
50
51

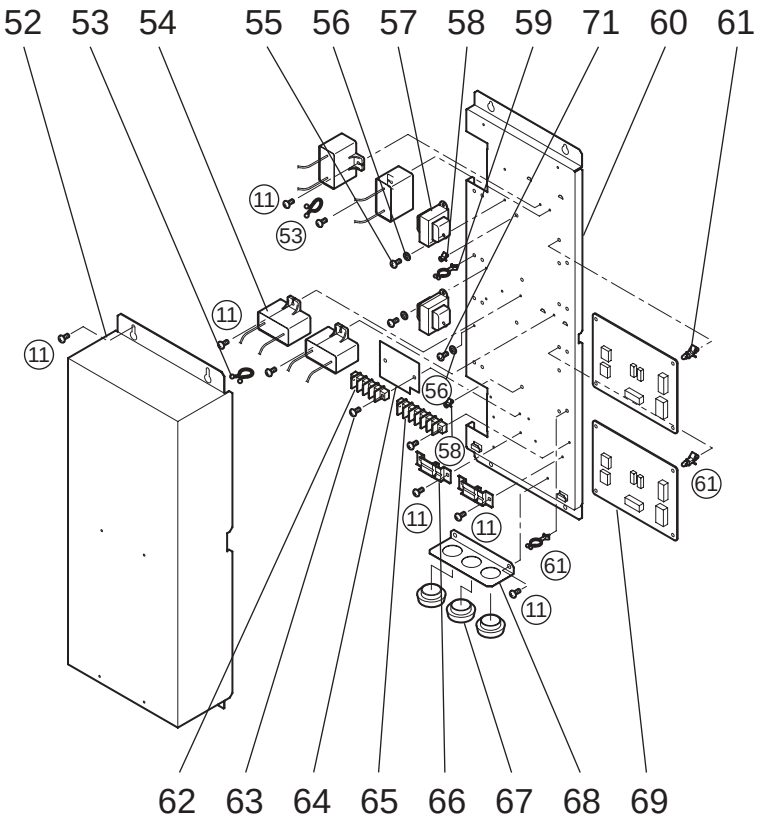
52
53
54
55
56
57
58
59
71
60
61
11
53
11
11
56
58
11
11
61
11
61
62
63
64
65
66
67
68
69

Model LGH-200RX3-E,LGH-200RX3-E-60

No.	Parts No.	Name of part	Q'ty pcs/unit	Critical for safety	Remarks	Price
1.	H00 000 333	P T T screw 4×14	32			
2.	R50 220 607	Flange	4			
3.	R50 213 344	Hinge	2			
4.	R50 111 381	Fix plate	8			
5.	H00 000 244	P T screw 6×12	24			
6.	R50 397 708	Maintenance cover	2			
7.	R50 219 381	Core guide	2			
8.	Y50 063 718	Filter	4	⚠		
9.	R50 219 710	Lossnay core	4	⚠		
10.	R50 266 381	Core guide	2			
11.	H00 000 487	P T T screw 4×8	35			
12.	Y50 029 712	Fix plate	4			
13.	R50 358 717	Sound absorbing material	2			

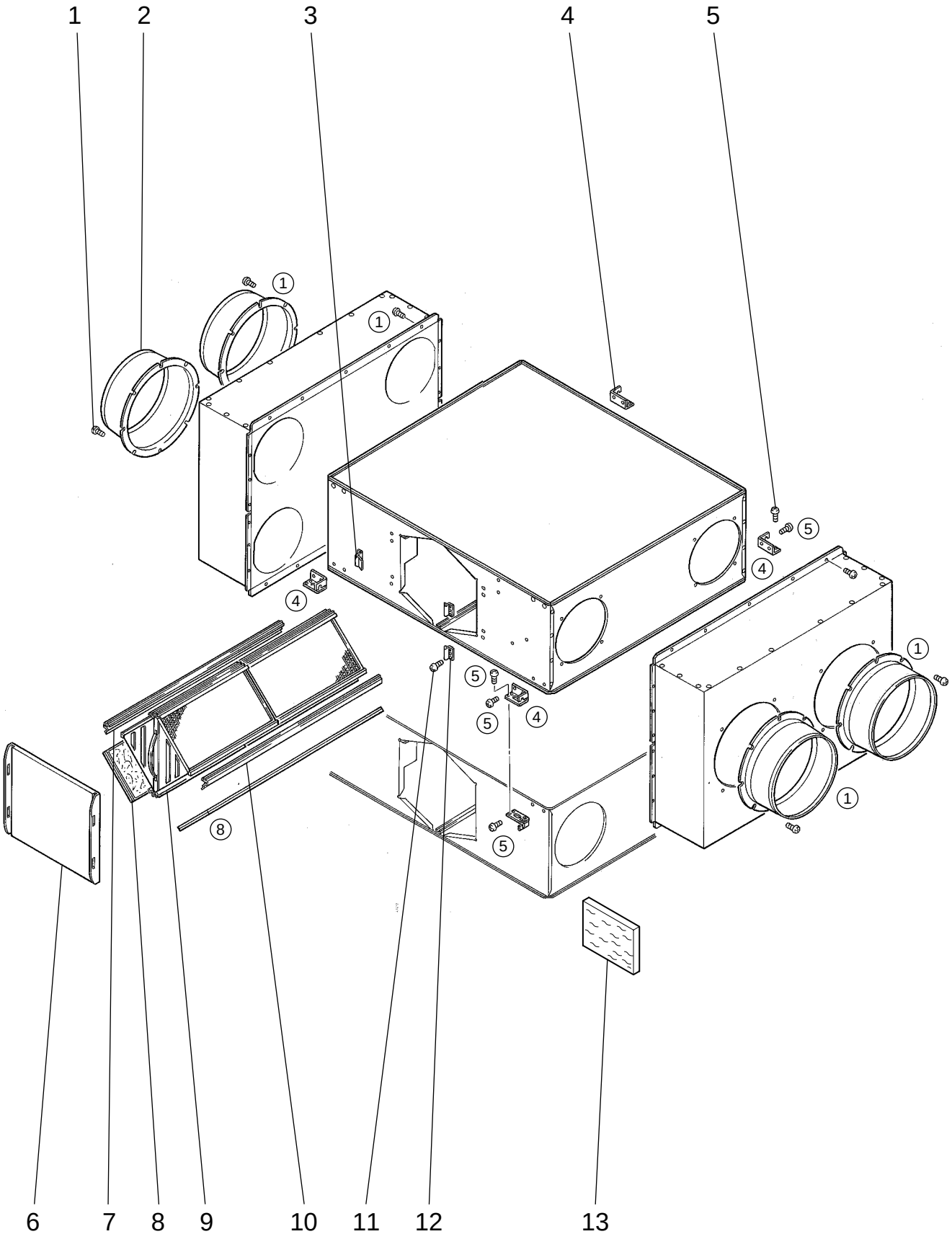
1
2
3
4
5
1
1
4
5
4
1
5
5
4
1
5
8
6
7
8
9
10
11
12
13

Model LGH-200RX3-E,LGH-200RX3-E-60

No.	Parts No.	Name of part	Q'ty pcs/unit	Critical for safety	Remarks	Price
21.	R50 218 067	Special nut	4			
22.	K83 466 113	Special washer(12)	4			
23.	R50 357 480	Centrifugal fan	4	⚠	ϕ 250	
24.	H00 157 008	P T screw 6×20	16			
25.	M34 043 080	Special washer	16			
26.	R50 000 095	Spacer	16			
27.	R50 217 225	Bush	16			
28.	Y50 033 707	Fan base	4			
29.	H00 189 007	P T T screw 5×10	32			
30.	R50 264 711	Inlet plate	4			
31.	R50 218 712	Motor base	4			
32.	Y50 063 452	Motor	4	⚠	50Hz	
32.	Y50 063 453	Motor	4	⚠	60Hz	
33.	H00 061 050	Nut(6)	16			

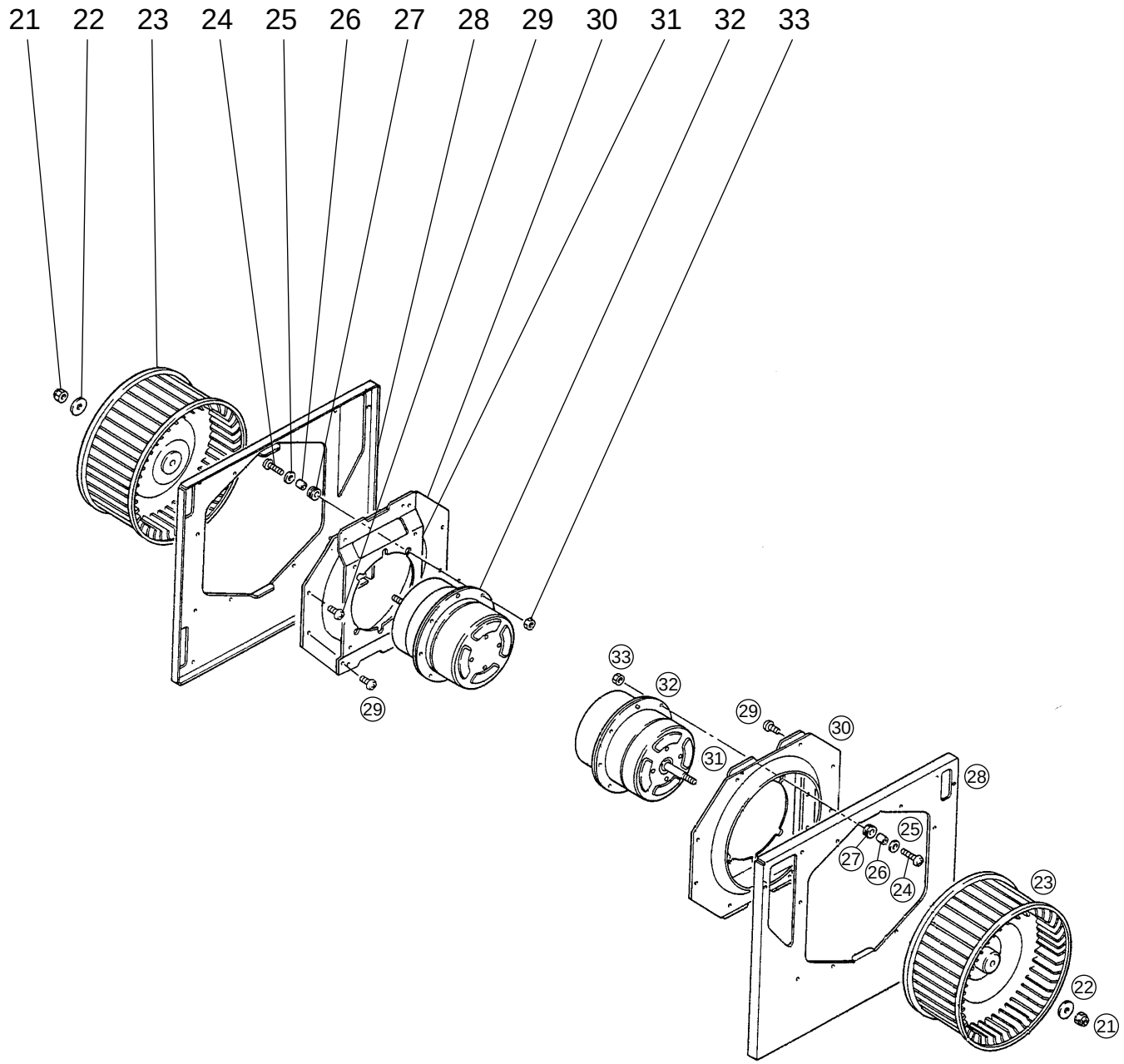
21
22
23
24
25
26
27
28
29
30
31
32
33
29
33
32
29
30
31
28
25
27
26
24
23
22
21

Model LGH-200RX3-E,LGH-200RX3-E-60

No.	Parts No.	Name of part	Q'ty pcs/unit	Critical for safety	Remarks	Price
41.	Y50 061 693	Damper motor cover	2			
42.	H00 312 007	P T T screw 4×6	8			
43.	R50 074 156	Pull spring	2			
44.	R50 218 716	Damper support	2			
45.	M31 234 089	Special bush	4			
46.	R50 271 715	Damper	2			
47.	Y50 061 260	Damper motor	2	⚠	220-240V	
48.	R50 265 150	Rod	2			
49.	Y50 064 216	Thermistor	2	⚠		
50.	R50 399 223	Cord clip	8			
51.	R50 399 224	Cord clip	4			
52.	Y50 045 707	Cover plate	1			
53.	K83 170 228	Cord band	2			
54.	Y50 063 283	Capacitor	4	⚠	7.0μF・440WAC	
55.	H00 000 003	P P screw 4×8	5			
56.	H00 013 076	Lock washer	4			
57.	Y50 047 216	Transformer	2	⚠	230WAC	
58.	D42 019 095	Spacer	6			
59.	M35 164 224	Cord clip	8			
60.	Y50 064 706	Fix plate	1			
61.	X40 139 095	Spacer	8			
62.	R50 072 236	Terminal	1	⚠	4P	
63.	H00 000 488	P T T screw 4×12	4			
64.	Y50 061 226	Insulation plate	1			
65.	R50 069 236	Terminal	1		6P	
66.	D40 058 224	Cord clip	2			
67.	Y50 047 226	Cord bush	3			
68.	Y50 064 707	Hanger(cord)	1			
69.	Y50 061 171	PCB assy	2	⚠	LG-X01-E	
70.	R50 054 225	Bush	4			
71.	H00 011 008	P T screw 4×8(BS)	1			

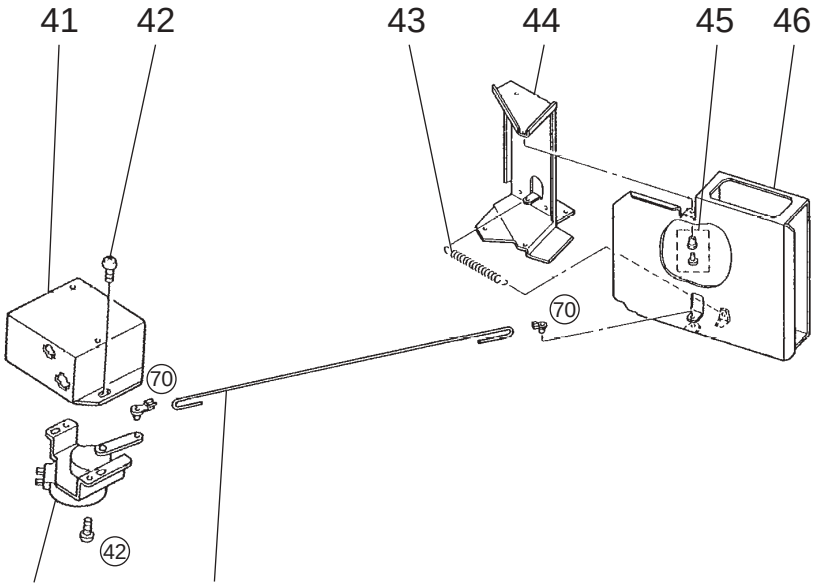
41
42
43
44
45
46
70
70
42
47
48

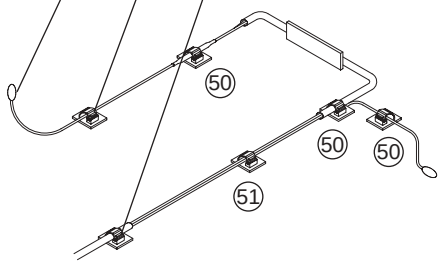
49
50
51
50
50
50
51

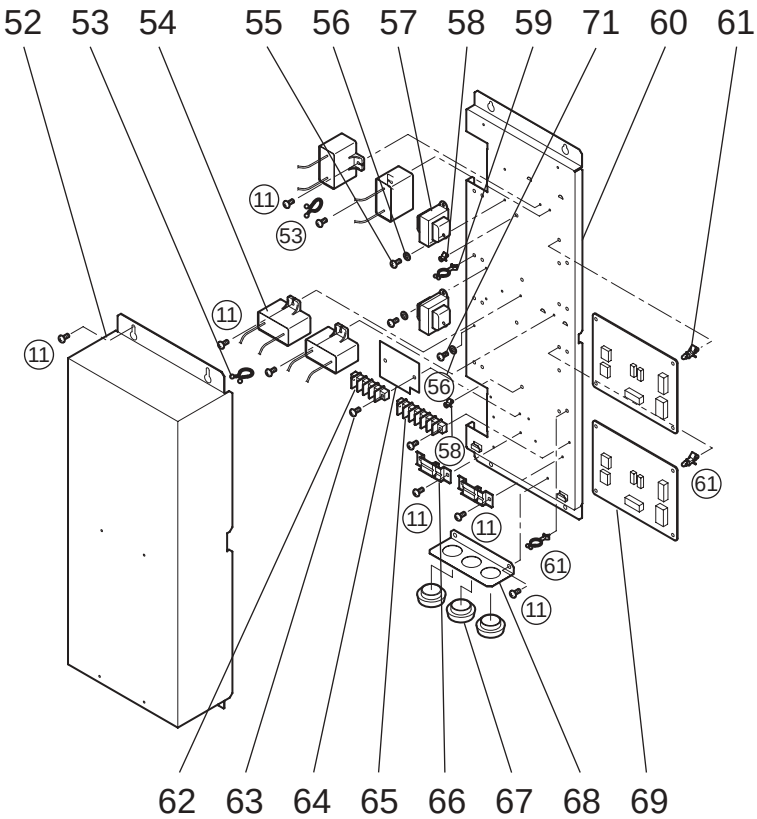
52
53
54
55
56
57
58
59
71
60
61
11
53
11
11
56
58
11
11
61
11
61
62
63
64
65
66
67
68
69

Printed in Japan in January, 2002
100 <MEE>